DIGITAL WATCHDOG®
Complete Surveillance Solutions

STAR-LIGHT Universal HD over Coax™ Bullet Camera

DWC-B6263WTIR – 2.8~12mm vari-focal lens, gray housing
DWC-B2623WTIRW – 2.8~12mm vari-focal lens, white housing
DWC-B2623WTIR650 – 6~50mm long-range lens, gray housing
DWC-B2623WTIR650W – 6~50mm long-range lens, white housing

c UL us LISTED

User's Manual Ver. 10/22

Before installing and using the camera, please read this manual carefully.
Be sure to keep it handy for future reference.

STAR-LIGHT™
Universal HD Super Low Light Cameras

CAUTION

RISK OF ELECTRIC SHOCK.
DO NOT OPEN

CAUTION:

TO REDUCE THE RISK OF ELECTRIC SHOCK, DO NOT REMOVE COVER (OR BACK) NO USER SERVICEABLE PARTS INSIDE. REFER SERVICING TO QUALIFIED SERVICE PERSONNEL.

This symbol indicates that dangerous voltage consisting a risk of electric shock is present within this unit.

This exclamation point symbol is intended to alert the user to the presence of important operating and maintenance (servicing) instructions in the literature accompanying the appliance

WARNING

1. In the use of the product, you must be strict compliance with the electrical safety regulations of the nation and region. When the product is mounted on a wall or ceiling, the device shall be firmly fixed.
2. Be sure to use only the standard adapter specified in the specification sheet. Using any other adapter could cause fire, electrical shock, or damage to the product.
3. Make sure the power supply voltage is correct before using the camera.
4. Incorrectly connecting the power supply or replacing the battery may cause an explosion, fire, electric shock, or damage to the product.
5. Do not connect multiple cameras to a single adapter. Exceeding the capacity may cause excessive heat generation or fire.
6. Securely plug the power cord into the power source. An insecure connection may cause a fire.
7. When installing the camera, fasten it securely and firmly. A falling camera may cause personal injury.
8. Do not install in a location subject to elevated temperature, low temperature, or high humidity. Doing so may cause fire or electric shock.
9. Do not place conductive objects (e.g. screwdrivers, coins, metal items, etc.) or containers filled with water on top of the camera. Doing so may cause personal injury due to fire, electric shock, or falling objects.
10. Do not install the unit in humid, dusty, or sooty locations. Doing so may cause fire or electric shock.

11. Do not install near any heat sources such as radiators, heat registers, or other products (including amplifiers) that produce heat.
12. Keep out of direct sunlight and heat radiation sources. It may cause a fire.
13. If any unusual smells or smoke come from the unit, stop using the product at once. Immediately disconnect the power source and contact the service center. Continued use in such a condition may cause fire or electric shock.
14. If this product does not operate normally, contact the nearest service center. Never disassemble or change this product in any way.
15. When cleaning the product, do not spray water directly onto parts of the product. Doing so may cause fire or electric shock.

CAUTION

1. Use proper safety gear when installing and wiring the product.
2. Do not drop objects on the product or apply strong shock to it. Keep away from a location subject to excessive vibration or magnetic interference.
3. Do not use this product near water.
4. The product shall not be exposed to dripping or splashing and no objects filled with liquids, such as vases, shall be placed on the product.
5. Avoid aiming the camera directly towards extremely bright objects such as the sun, as this may damage the image sensor.
6. The Main plug is used as a disconnect device and shall stay readily operable at any time.
7. Remove the power adapter from the outlet when then there is lightning. Neglecting to do so may cause fire or damage to the product.
8. Do not block any ventilation openings. Install following the manufacturer's instructions.
9. A polarized or grounding-type plug is recommended for this product. A polarized plug has two blades with one wider than the other. A grounding-type plug has two blades and a third grounding prong. If the provided plug does not fit into your outlet, consult an electrician for replacement.

10. Protect the power cord from being walked on or pinched particularly at plugs, convenience receptacles, and the point where they exit from the product.
11. If any laser equipment is used near the product, make sure the surface of the sensor is not exposed to the laser beam as that may damage the sensor module.
12. If you want to move the already installed product, be sure to turn off the power and then move or reinstall it.
13. Proper configuration of all passwords and other security settings is the responsibility of the installer and/or end-user.
14. If cleaning is necessary, please use a clean cloth to wipe it gently. If the device will not be used for a long time, please cover the lens cap to protect the device from dirt.
15. Do not touch the camera's lens or sensor module with fingers. If cleaning is necessary, please use a clean cloth to wipe it gently. If the device will not be used for a long time, please cover the lens cap to protect the device from dirt.

16. Use only attachments/accessories specified by the manufacturer.
17. Always use hardware (e.g. screws, anchors, bolts, locking nuts, etc.) compatible with the mounting surface and of sufficient length and construction to ensure a secure mount.
18. Use only with cart, stand, tripod, bracket, or table specified by the manufacturer, or sold with the product.
19. Unplug this product when a cart is used. Use caution when moving the cart/product combination to avoid injury from tip-over.
20. Refer all servicing to qualified service personnel. Servicing is needed when the product has been damaged in any way, such as power supply cord or plug is damaged, liquid has been spilled or objects have fallen into the product, the product has been exposed to rain or moisture, does not operate normally, or has been dropped.

Legal considerations

Video surveillance can be regulated by laws that vary from country to country. Check the laws in your local region before using this product for surveillance purposes.

Liability

Every care has been taken in the preparation of this document. Digital Watchdog cannot be held responsible for any technical or typographical errors and reserves the right to make changes to the product and manuals without notice.

Digital Watchdog makes no warranty of any kind regarding the material contained within this document. Digital Watchdog shall not be liable nor responsible for incidental or consequential damages in connection with the furnishing, performance, or use of this material. This product is only to be used for its intended purpose.

Equipment modifications

This equipment must be installed and used in strict accordance with the instructions given in the user documentation. Changes or modifications not expressly approved by the party responsible for compliance could void the user's authority to use the equipment.

Trademark acknowledgments

Digital Watchdog, DW, DW Spectrum, MEGApix and Star-Light are registered trademarks or trademark applications of Digital Watchdog in various jurisdictions.

Apple, Apache, Bonjour, Chrome, Ethernet, Internet Explorer, Linux, Microsoft, Mozilla, Real, SMPTE, QuickTime, UNIX, Windows, and WWW are registered trademarks of the respective holders. Java and all Java-based trademarks and logos are trademarks or registered trademarks of Oracle and/or its affiliates. The UPnP Word Mark and UPnP Logo are trademarks of Open Connectivity Foundation, Inc. in the United States, or other countries.

microSD, microSDHC, and microSDXC Logos are trademarks of SD-3C LLC. microSD, microSDHC, microSDXC are trademarks or registered trademarks of SD-3C, LLC in the United States, other countries, or both.

Safety

This product is intended to be supplied by a UL Listed Power Supply Unit marked "Class 2" or "LPS" or "PS2" and rated 12 Vdc, 0.37A min. (DWC-B6263WTIR) or 0.50A min. or 24 Vac, 50/60Hz 0.32A min. (DWC-B6263WTIR650).

Regulatory Information
USA
This device complies with part 15 of the FCC Rules, subject to the following two conditions: (1) this device may not cause harmful interference, and (2) this device must accept any interference received, including interference that may cause undesired operation.
This equipment has been tested and found to comply with the limits for a Class B digital device, according to part 15 of the FCC Rules. These limits are designed to provide reasonable protection against harmful interference in a residential installation. This equipment generates, uses and can radiate radio frequency energy and, if not installed and used following the instructions, may cause harmful interference to radio communications. However, there is no guarantee that interference will not occur in a particular installation. If this equipment does cause harmful interference to radio or television reception, which can be determined by turning the equipment off and on, the user is encouraged to try to correct the interference by one or more of the following measures:
• Reorient or relocate the receiving antenna.
• Increase the separation between the equipment and receiver.
• Connect the equipment into an outlet on a circuit different from that to which the receiver is connected.
• Consult the dealer or an experienced radio/TV technician for help

Canada
This digital apparatus complies with CAN ICES-3 (Class B). The product shall be connected using a shielded network cable (STP) that is properly grounded. Cet appareil numérique est conforme à la norme CAN NMB-3 (classe B). Le produit doit être connecté à l'aide d'un câble réseau blindé (STP) qui est correctement mis à la terre.

Disposal and recycling
Digital Watchdog cares for the environment at all product manufacturing stages and is taking measures to provide customers with more environmentally friendly products. When this product has reached the end of its useful life, dispose of it according to local laws and regulations. For information about your nearest designated collection point, contact your local authority responsible for waste disposal. Following local legislation, penalties may be applicable for incorrect disposal of this waste.

Copyright © Digital Watchdog 2022. All rights reserved. Specifications and pricing are subject to change without notice.

Contents

INTRODUCTION

08 Features
09 Product & Accessories
10 Parts Name
11 Dimension

INSTALLATION

12 Installation
14 Connecting to Monitors
16 Control Board
18 Adjusting the Camera angle

OSD MENU

19 Menu Tree
20 Exposure
24 Color
25 Day/Night
26 Function
27 Motion
28 Privacy
29 Setup
31 Exit

APPENDIX

32 Troubleshooting
33 Specifications

36 LIMITS AND EXCLUSIONS

37 WARRANTY INFORMATION

Features

- Universal HD over Coax® technology with HD-Analog, HD-TVI, HD-CVI and all legacy analog
- signal support
- Star-Light™ super low light technology
- 2.1MP/1080p 1/3" image sensor at real-time 30fps
- 2.8~12mm varifocal p-iris lens (DWC-B6263WTIR model)
- 6~50mm varifocal p-iris lens (DWC-B6263WTIR650 model)
- True wide dynamic range (WDR)
- OSD control via coaxial (UTC)
- 100' Smart IR™ with intelligent camera sync. (DWC-B6263WTIR model)
- 150' Smart IR™ with intelligent camera sync. (DWC-B6263WTIR650 model)
- Smart DNR™ 3D digital noise reduction
- True day/night mechanical IR cut filter
- De-Fog™ extreme weather image compensation
- Highlight masking exposure (HME)
- Auto sensing 24VAC/12VDC with line lock
- Easy icon driven OSD menu with built-in joystick
- Programmable Privacy Zones
- Auto gain control (AGC)
- Backlight compensation (BLC)
- Auto white balance (AWB)
- UL listed
- RS-485 built-in
- NDAA compliant
- IP66 environmental-rated dust-tight and water-resistant
- 5 year warranty

Product & Accessories

※ Please check that all items below are included in the package.

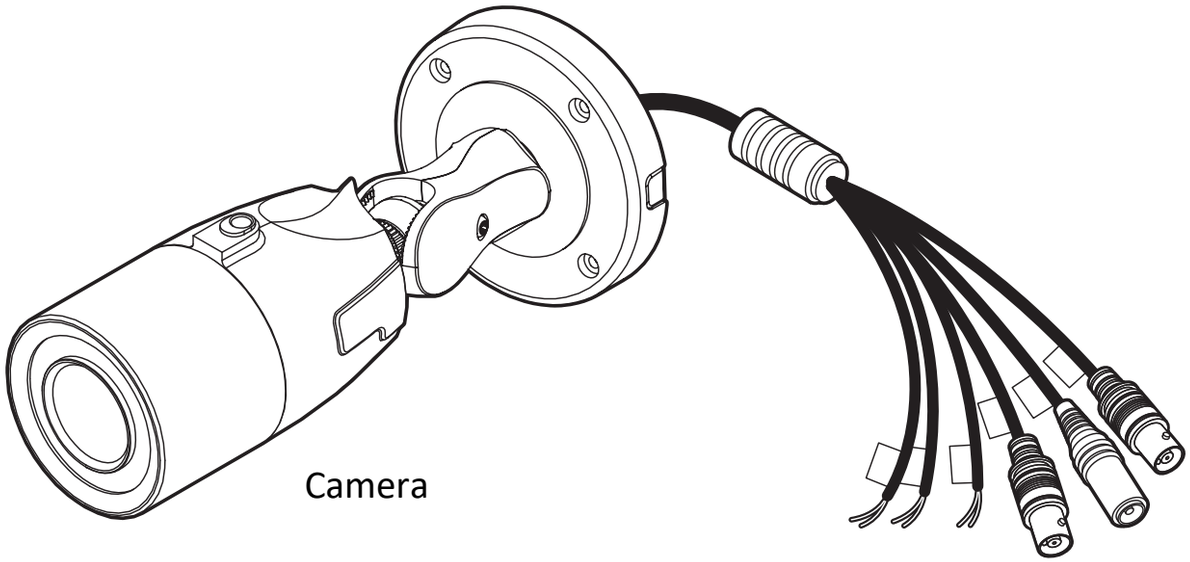

Camera

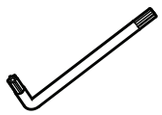

Star Wrench
(T-20)

DC Plug Cable

Sunshield Cover &
Adjusting Screws

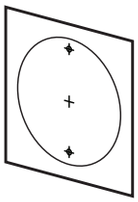

Mounting Template

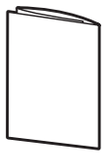

Quick Setup &
Installation Guides

Screws &
Plastic Anchors - 4pcs

Moisture Absorber &
Absorber Guide

Part name

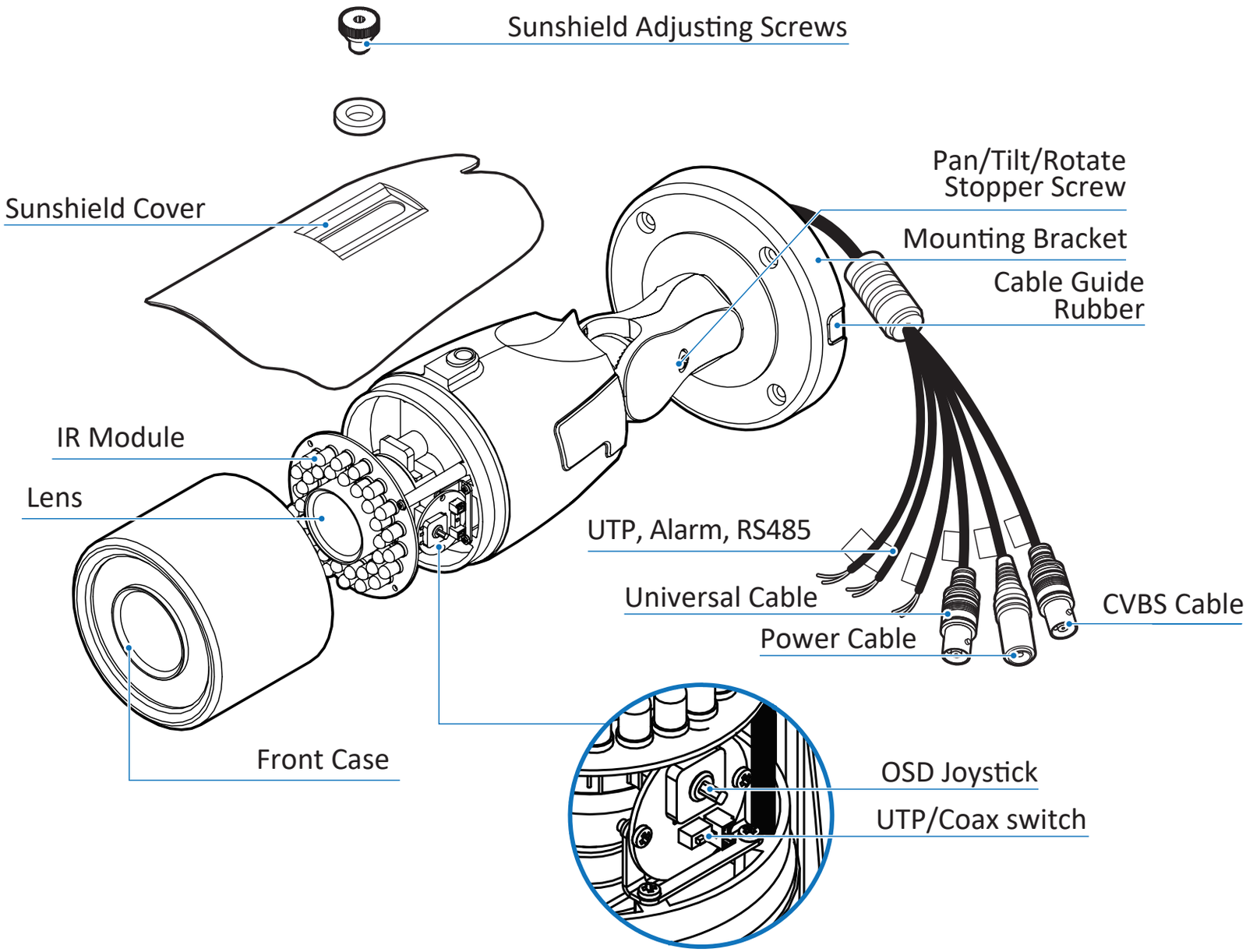

UTP BLUE + DOT -	ALARM	RS 485 ORG D+ DOT D -	UNIVERSAL	DC12V AC24V	CVBS

Dimension

Unit: inches (mm)

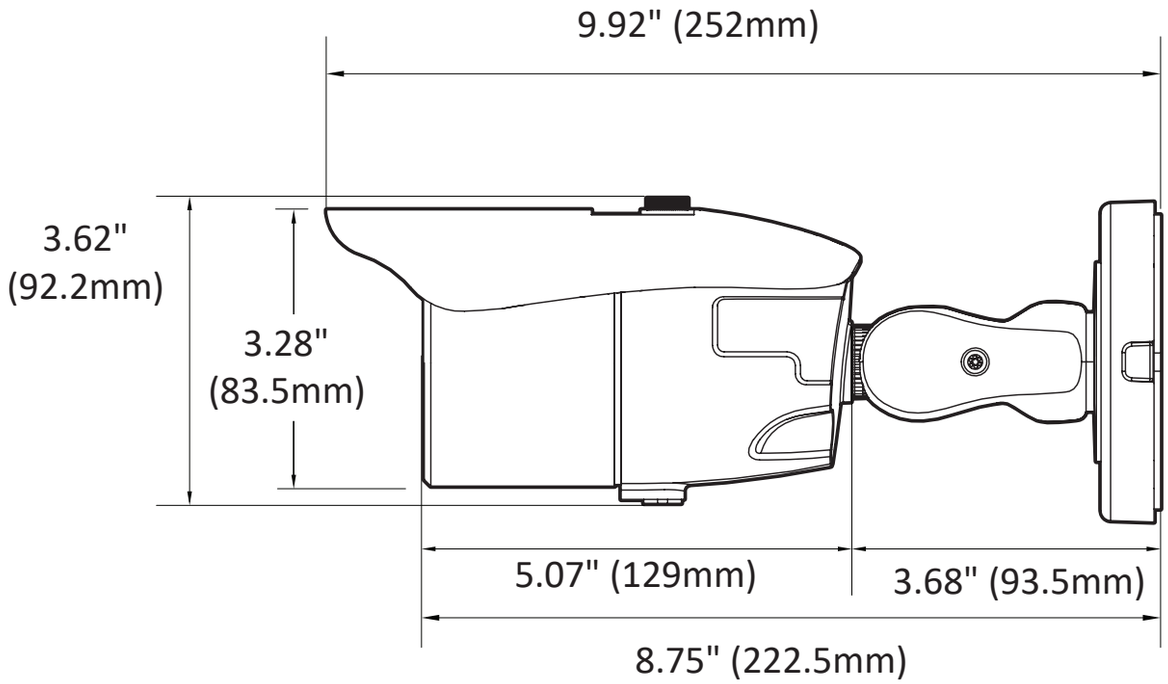

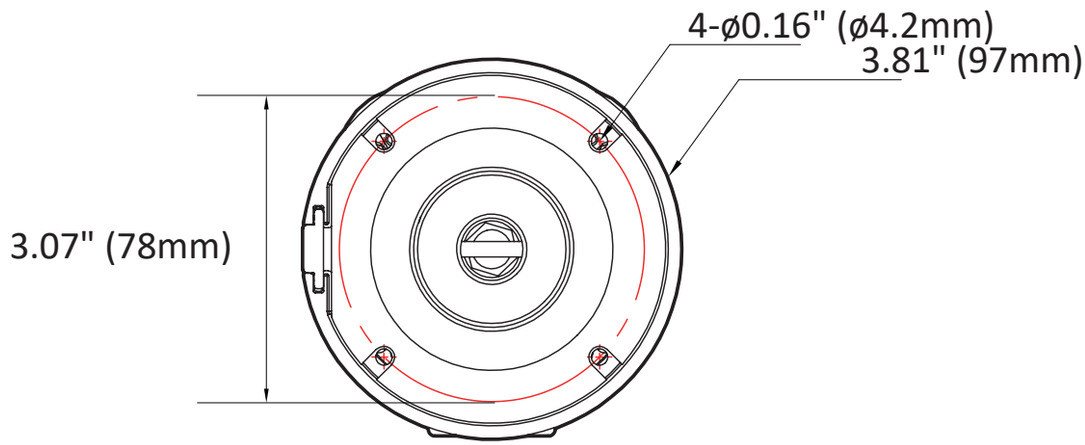

Before the installation:

1. The mounting surface must withstand five times the camera weight.
2. Pay attention to the cables. The can easily become caught and damaged. Any damage may cause a short or fire.
3. Install the moisture absorber in the base of the camera's lens.
   a. Remove the moisture absorber from the packaging.
   b. Cut the card and folder along the dotted line.
   c. Place the moisture absorber behind the camera's lens module. See drawing for more information.

NOTE: The camera will generate enough heat to dry moisture during operation. In most cases it will not need the moisture absorber for more than the first day. In cases where the camera can experience a moisture issue, users must keep the moisture absorber in the camera. The moisture absorber has an approximately 6-month life cycle, varying depending on the environment.

WARNING: It is highly recommended that you install the moisture absorber when mounting the camera. The moisture absorber prevents moisture from being captured inside the camera's housing, which may cause image performance issues and damage the camera.

※ Please cut the card type absorber along a dotted line, overlap and attach them according to the direction of the arrow.

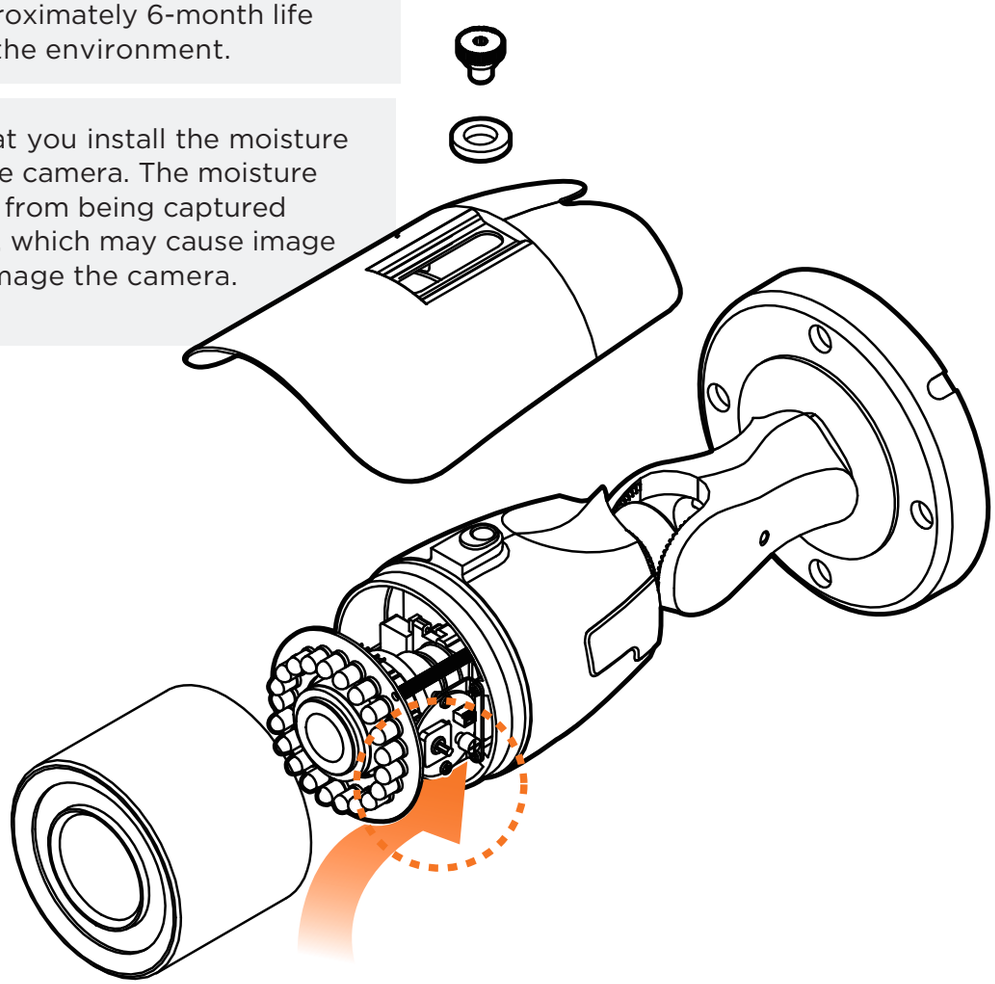

Adjust the Lens's Zoom and Focus

1. Remove the sun-shield and front case from the camera.
2. Unlock the zoom or focus screws by rotating them counterclockwise.
3. Use the wrench included to adjust the zoom and focus screws at the base of the camera module to achieve a clear image.
4. Tighten the screws and close the front case by rotating it clockwise.

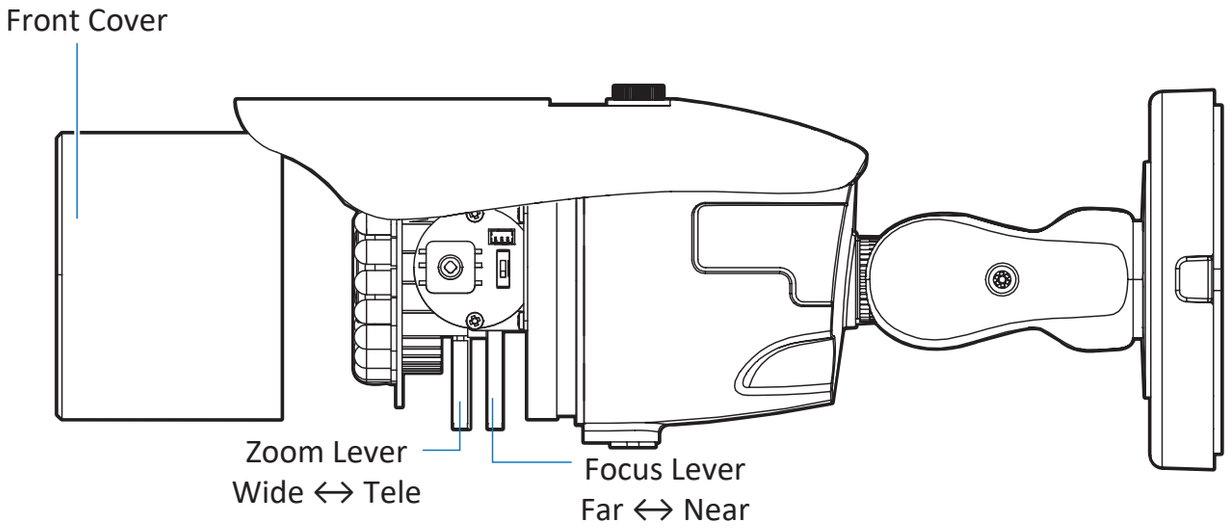

※ **NOTE:** If the front cover is cross threaded or not correctly tightened the camera housing will not be weatherproof.

Installation - Instructionsy

1. Using the mounting template or your own camera, mark and drill the necessary holes to mount the bracket to a wall or ceiling.
2. Pull all necessary wires through and make the proper connections.
3. Mount the camera to the mounting surface or mounting accessory using the screws and anchors included.
4. To adjust the camera's tilt, loosen the screws at the base of the camera's bracket.
5. When the installation is complete, softly wipe the lens cover with lens tissue or a microfiber cloth with ethanol to remove any dust or smudges left from the installation process.

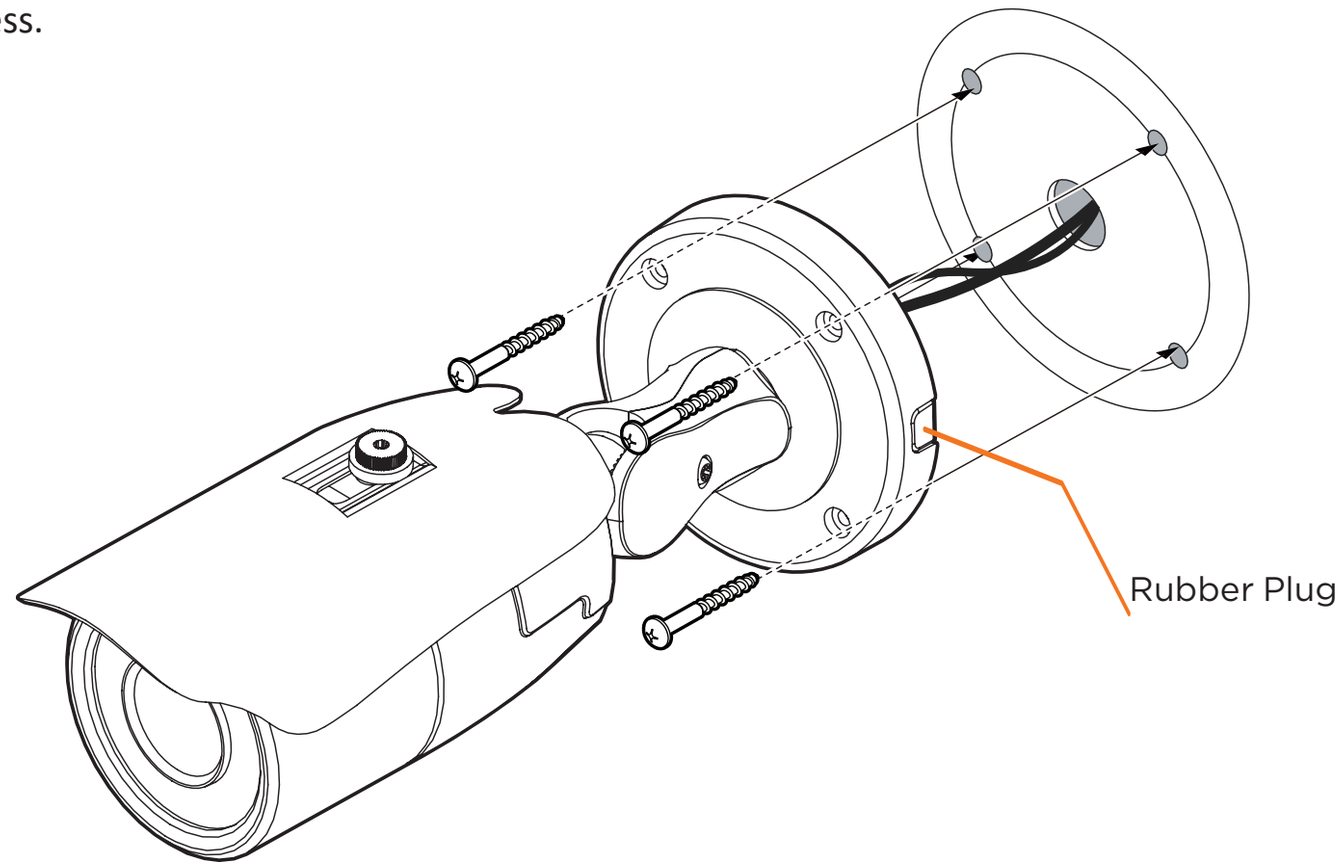

※ **NOTE:** Electrical junction box and required screws sold separately.

※ **Cable Guide Rubber:**
Based on the installation environment, remove the rubber plug on the side of the camera's bracket and use the gap as a cable guide to prevent cables from getting caught between the camera and the mounting surface, which can cause damage to the cables and prevent the camera from mounting flush with the mounting surface.

Connecting to Monitors (Coax)

Use the diagram below to connect to an Universal DVR or CRT Monitor properly.
Coax Video Output Mode (Default Mode)

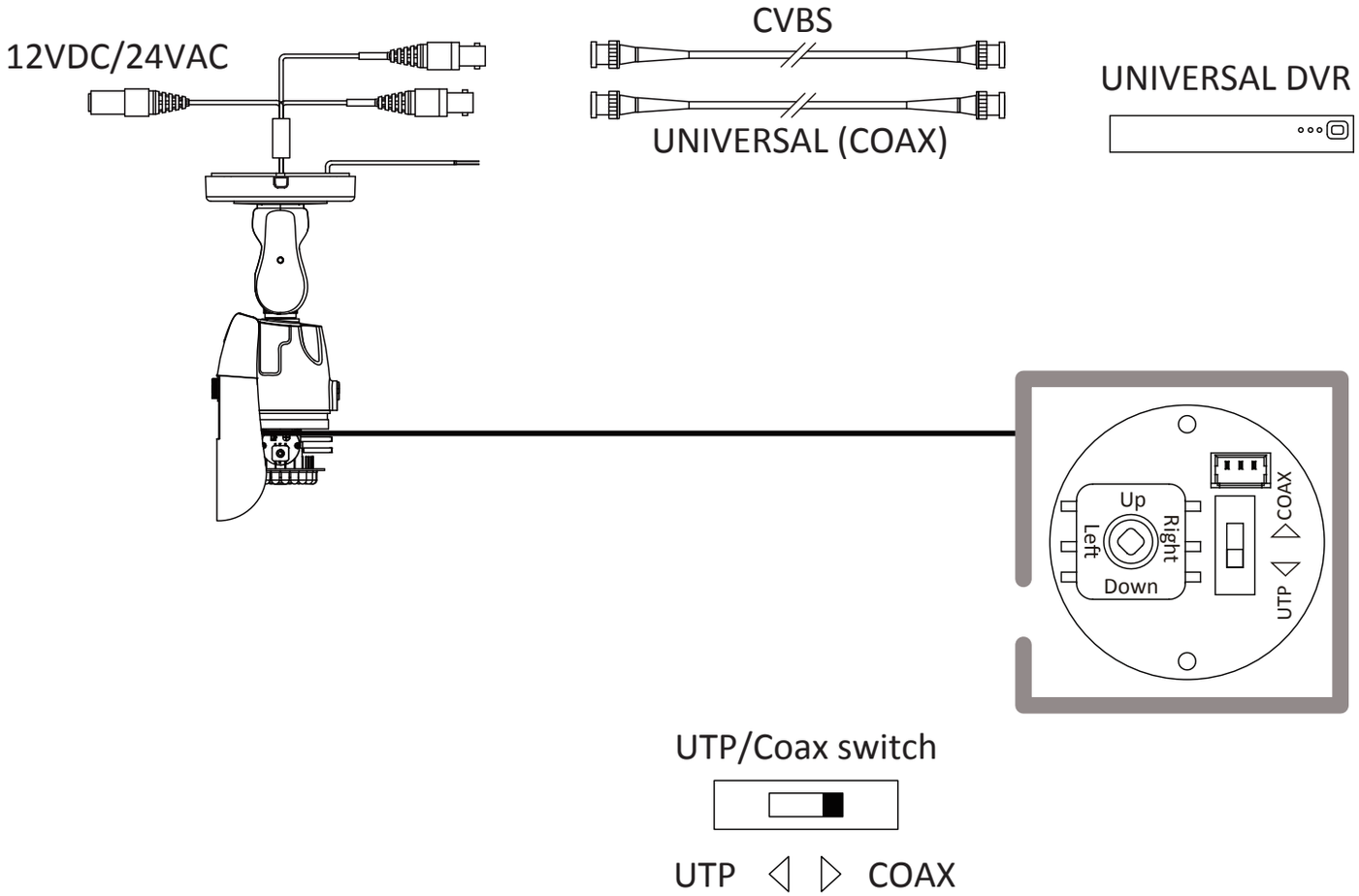

- Power Connection - 12VDC/24VAC Dual Voltage
  (Auto Polarity Detection and Protection)
- All cameras are equipped with a test video output for on-site configuration.

※ **NOTE :** When switching to UTP/Coax switch to Coax, the image will not be output when switched to UTP.

Connecting to Monitors (UTP)

Use the diagram below to connect to an Universal DVR or CRT Monitor properly.
UTP Video Output Mode

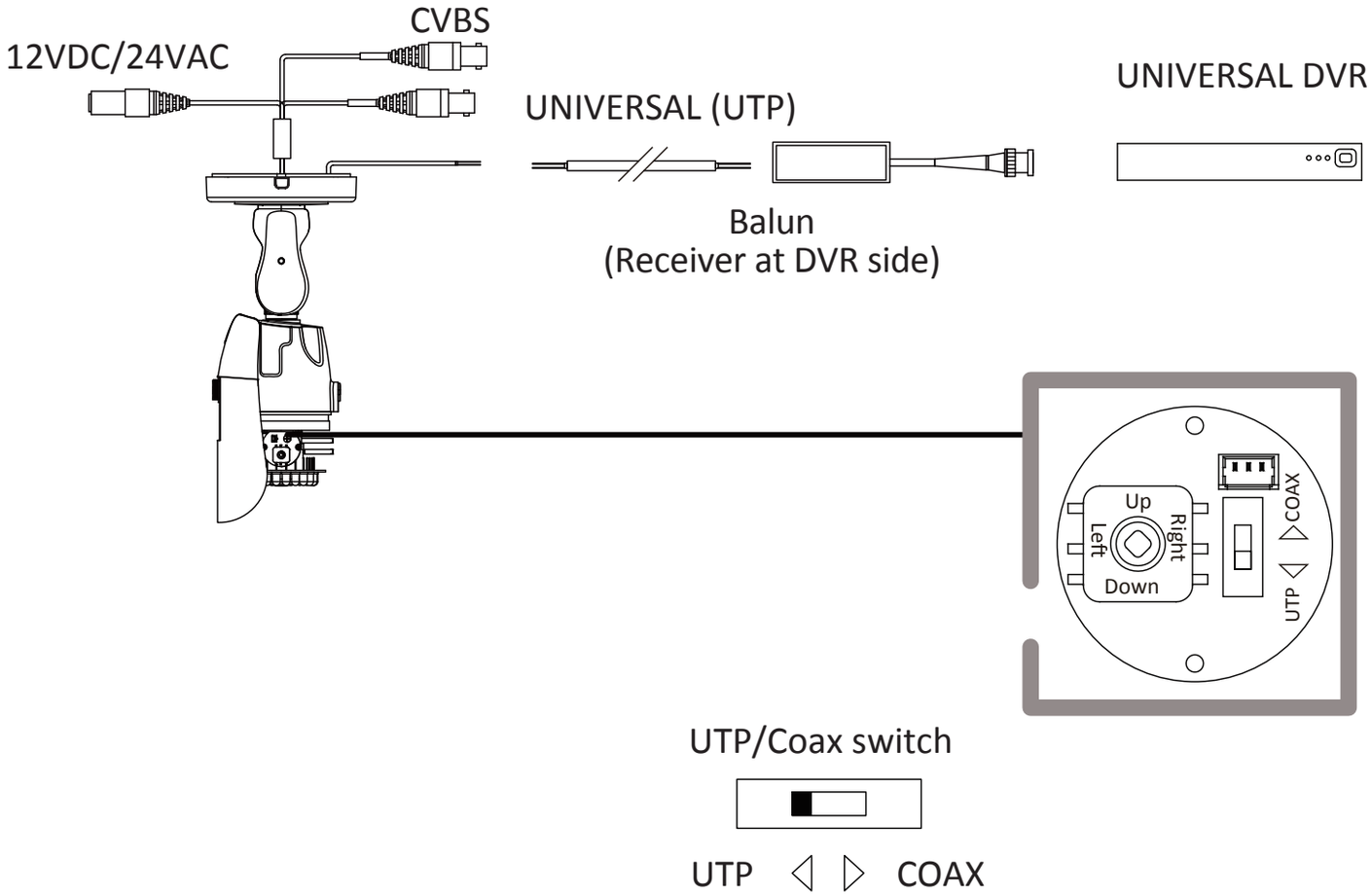

- Power Connection - 12VDC/24VAC Dual Voltage
  (Auto Polarity Detection and Protection)
- All cameras are equipped with a test video output for on-site configuration.

※ **NOTE :** When switching to UTP/Coax switch to UTP, the image will not be output when switched to Coax.

Control Board

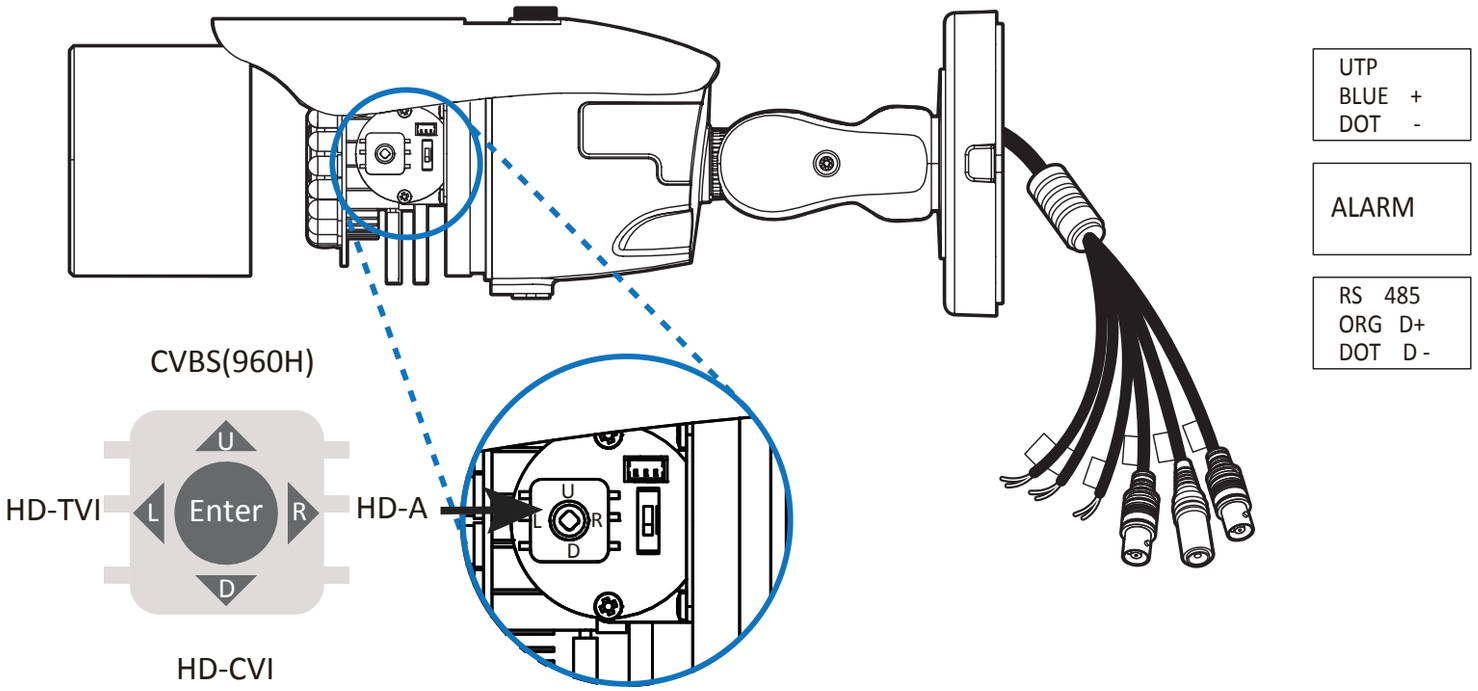

- OSD Joystick: The function setting and video output can be adjusted with OSD joystick. (default : HD-A)

Image Mode

Switches to HD-TVI mode when press OSD Joystick to left 5sec or longer.
Switches to HD-A mode when press OSD Joystick to right 5sec or longer.
Switches to CVBS mode when press OSD Joystick to up 5sec or longer.
Switches to HD-CVI mode when press OSD Joystick to down 5sec or longer.

Control Board

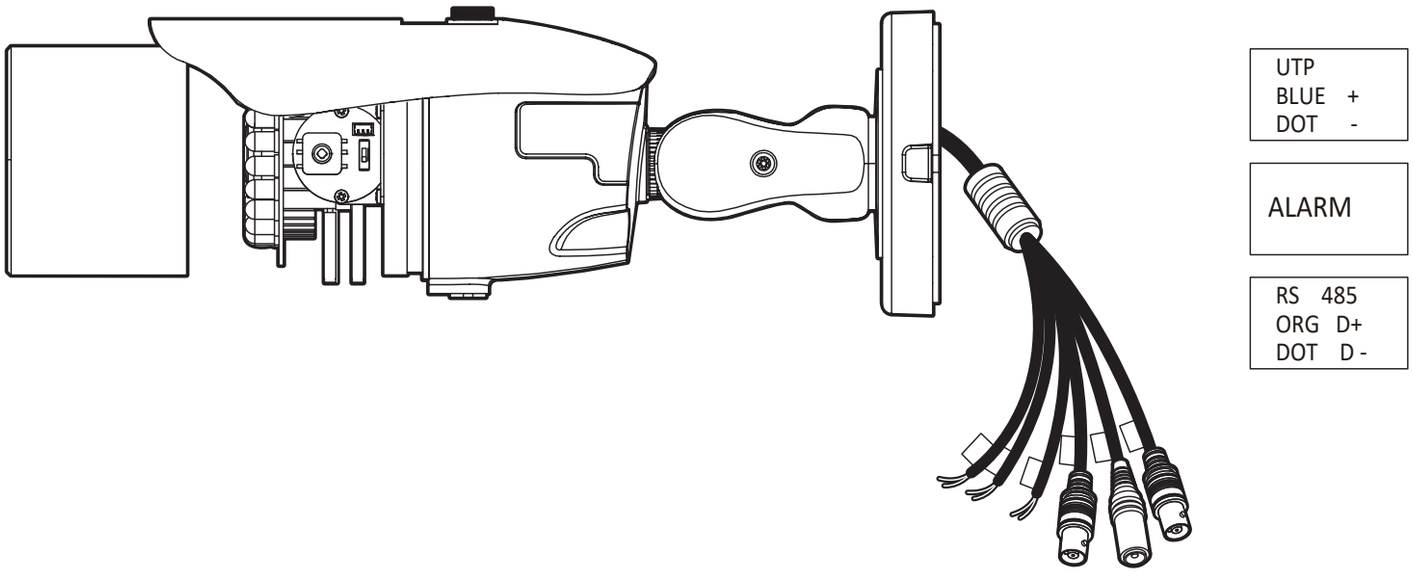

- RS485 Connectors: Connect the camera to a controller or the DVR using RS485.
  Orange: RS485 +, Orange + Dot : RS485 -
- UTP Cable: Connect when using UTP video output mode.
  Blue: +, Blue + Dot: -
- Alarm Output Cable: Cable to output Motion Detection signal.
  Brown: Alarm , Brown + Dot: GND

Alarm In Wiring Diagram

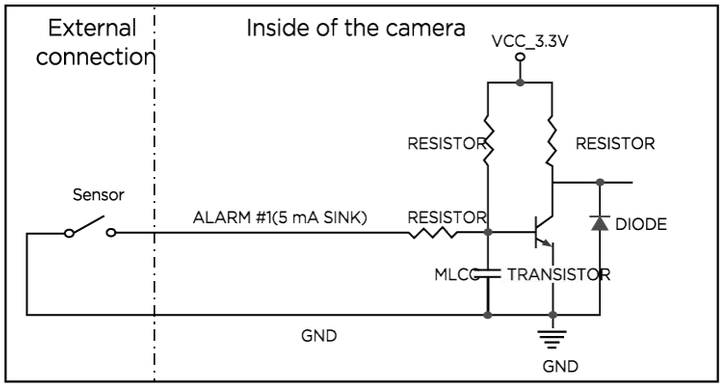

Alarm Out Wiring Diagram

When the warning light/siren exceeds DC12V/50mA

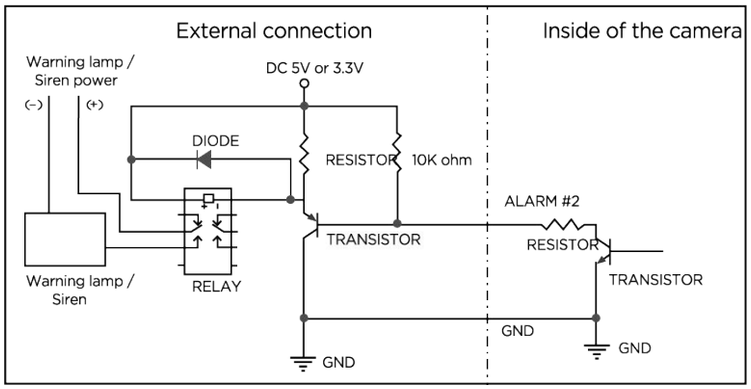

Adjusting the Camera angle

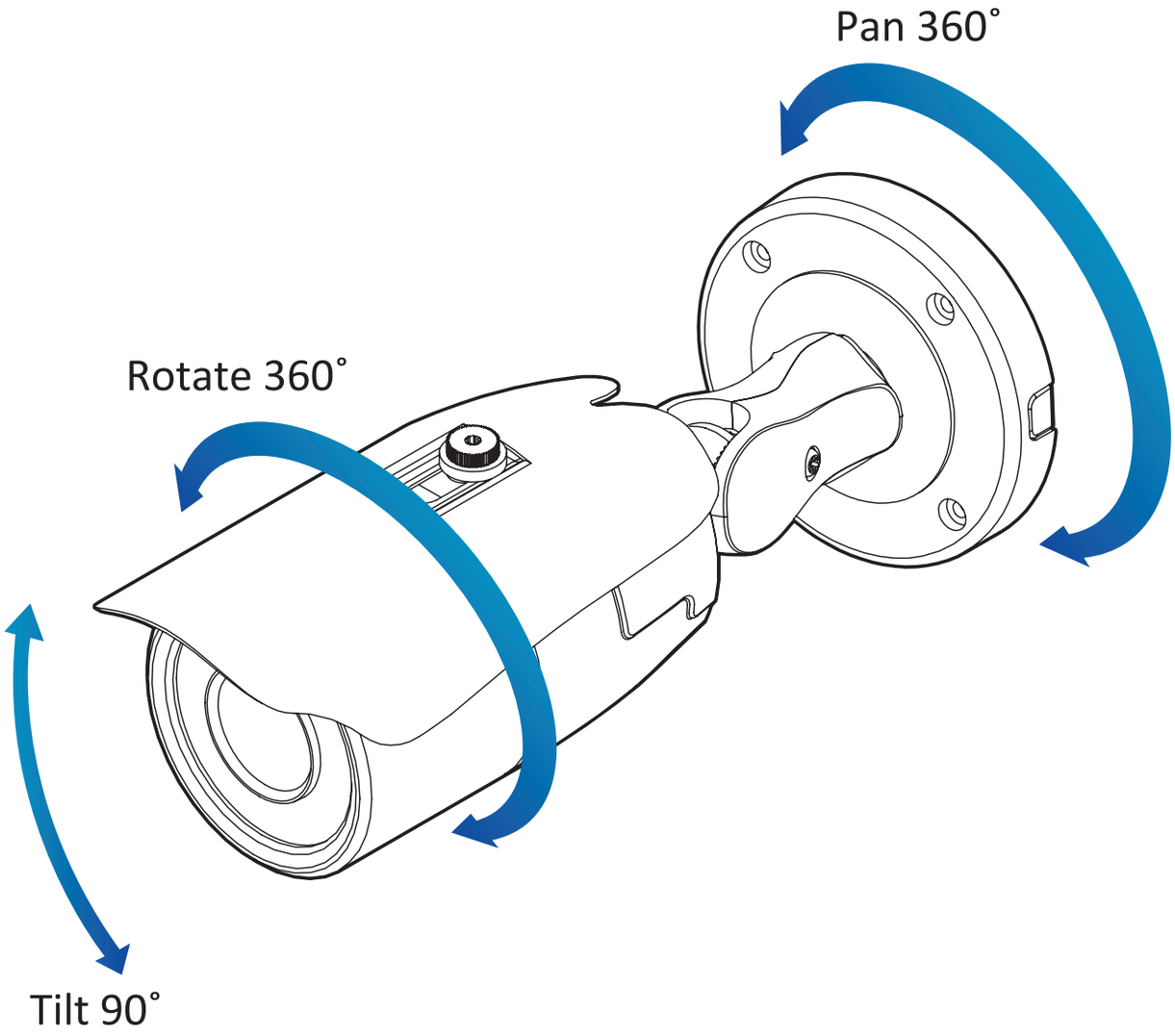

Warning:

- Do not rotate more than 360 ˚
- Do not unnecessarily twist too many times.

OSD Menu Tree

NOTE: The function setting can be adjusted with both switch (OSD joystick) and remote control through RS485 or UTC. In case of camera without OSD joystick, it can be adjusted with coaxial (UTC) only.

EXPOSURE

LENS	MANUAL / AUTO
BACKLIGHT	OFF / HME / BLC / WDR
DRC	OFF / LOW / MIDDLE / HIGH
DEFOG	OFF / ON
AGC	0 ~ 10
STARLIGHT	OFF / x2 ~ x32
3D DNR	OFF / LOW / MIDDLE / HIGH
EXIT JUMP	

COLOR

WHITE BAL.	AUTO / AUTO-EX / PRESET / MANUAL
COLOR GAIN	0 ~ 20
EXIT JUMP	

DAY & NIGHT

MODE	AUTO / COLOR / BW / EXTERN
CDS THRES	0 ~ 20
CDS MARGIN	0 ~ 20
EXTERN SW	LOW / HIGH
EXT LED	OFF/ AUTO
DELAY	LOW / MIDDLE / HIGH
SMART IR	0 ~ 20
EXIT JUMP	

FUNCTION

SHARPNESS	0 ~ 10
GAMMA	0.45 ~ 0.75
MIRROR	OFF / ON
FLIP	OFF / ON
EXIT JUMP	

MOTION

MOTION	OFF / ON
DET WINDOW	
DET TONE	0 ~ 4
MDRECT FILL	OFF / ON
SENSITIVITY	0 ~ 10
MOTION OSD	OFF / ON
TEXT ALARM	OFF / ON
SIGNAL OUT	OFF / ON
EXIT JUMP	

PRIVACY

PRIVACY	OFF / ON
ZONE NUM	0 ~ 15
ZONE DISP	OFF / ON
H-POS	0 ~ 59
V-POS	0 ~ 33
H-SIZE	0 ~ 60
V-SIZE	0 ~ 34
Y LEVEL	0 ~ 20
CB LEVEL	0 ~ 20
CR LEVEL	0 ~ 20
TRANS	0 ~ 3
EXIT JUMP	

SETUP

COMMUNICA	
CAM TITLE	OFF / RIGHT UP / LEFT DOWN
IMAGE RANGE	FULL / COMP / USER
FREQ	50Hz / 60Hz
LANGUAGE	ENG/ CHN/ CHN(S)/ JPN / KOR
INITIAL	OFF / ON
EXIT JUMP	

EXIT

SAVE & EXIT	
EXIT	

※ The contents might be different some products.

1 LENS

MANUAL : Manual mode supports the fixed board lens or the manual iris lens.
AUTO : AUTO mode sets the camera's iris automatically.

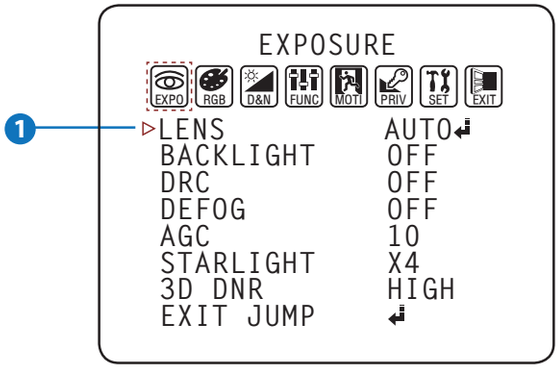

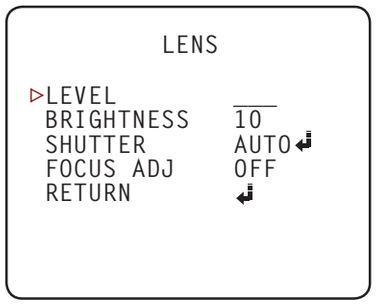

Under the LENS sub-menu, you can adjust the following settings:

1. Level
Change the camera's iris value manually. If AUTO is selected, this option is disabled.

2. Brightness
Adjust the camera's brightness from 0~20. The higher the number, the brighter the image will appear.

3. Shutter
Set the shutter speed to AUTO, Manual, or FLC (Flicker-less mode).
* If AUTO is selected, select from the following options :
  - NORMAL: Set when the camera is installed in an indoor environment.
  - DEBLUR: Set when the camera is installed in an outdoor environment.
* Select FLC if the camera is experiencing some flickering in the image.
  The shutter speed will be set to 1/100 for NTSC, or 1/120 for PAL.
* If Manual is selected, set the shutter speed from the options :
  - 1/30(1/25) ~ 1/30000.

4. Focus Adjustment
When on, the default level is set automatically by controlling lens focus and based on the installation and environment circumstances.

2 BACKLIGHT

OFF

HME HIGHLIGHT MASKING EXPOSURE

HME allows objects to appear clearly on the screen by masking extremely bright areas. To setup HME, set the level and color. The lower the setting, the darker the masking areas have to be. Select from: 0 ~ 20.
Color: Set the color of the HME mask. Select from: BLACK / WHITE / YELLOW / CYAN / GREEN / MAGENTA / RED / BLUE / CUSTOMIZE

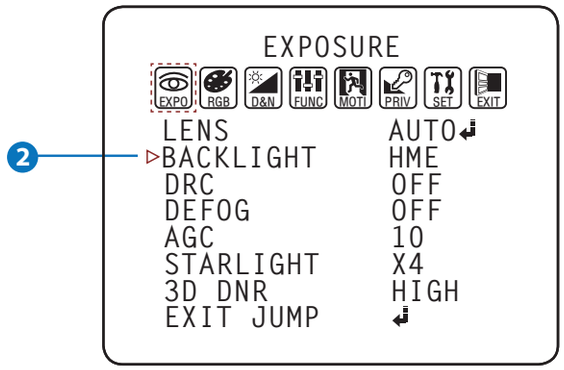

BLC BACK LIGHT COMPENSATION

If BLC is selected, adjust the size and position of the mask:
- H-POS: Move the Zone position left or right. The higher the number, the zone will move to the right.
- V-POS: Move the Zone position up or down. The higher the number, the zone will move down.
- H-Size: Reset the zone's size horizontally. The higher the number, the right side panel will move further to the right.
- V-Size: Reset the zone's size vertically. The higher the number, the bottom side panel will move further down.

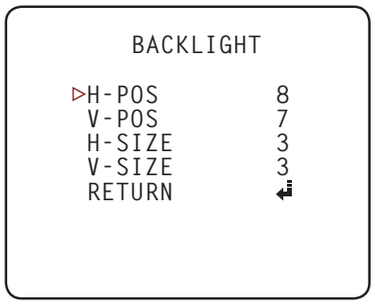

WDR Wide Dynamic Range

If WDR is selected, adjust the WDR level (Weight) in the sub-menu. Select from Low, Middle, or High (Default).

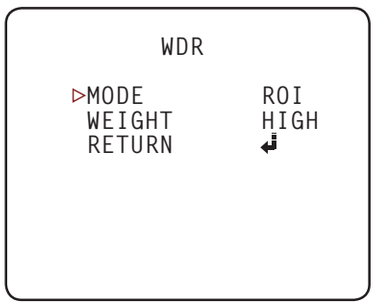

※ ROI (Region of interest)
To have more efficient scene result, up to 4 regions are able to be selected for WDR effect to maintain the most suitable color appearances.

※ WDR&3D-DNR functions can't be operated simultaneously. Once the WDR may activate then the DNR function shifts to 2D-DNR although DNR functions set by 3D-DNR as default setting.

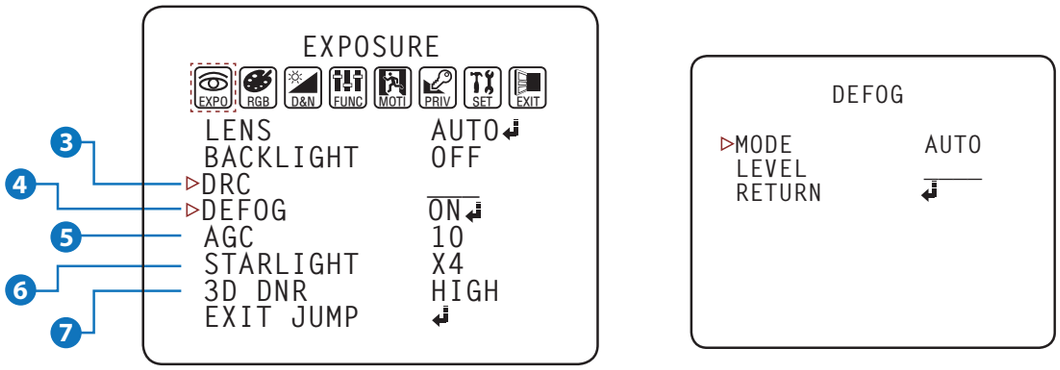

3 DRC (DYNAMIC RANGE COMPRESSOR)

DRC enables dark areas in images to become more visible without overexposing the bright areas to create one perfect image. Select from : OFF / LOW / MIDDLE / HIGH

4 DEFOG

Allows the camera to process a scene that is obscured by fog or weather conditions and provides a visibly improved image. AUTO / Manual : Select AUTO to have the WDR and DRC levels adjusted automatically. Set the DEFOG level from LOW / MIDDLE / HIGH.

5 AGC (AUTO GAIN CONTROL)

0~10 - AGC enhances the picture brightness in low light conditions. A higher level AGC setting makes the images brighter, however, it could increase the amount of noise.

6 STARLIGHT

OFF / x2 ~ x32(Default: X4) - Automatically activates slow shutter function when the image is too dark. High values are not recommended as they may causes the image to lag. Starlight menu cannot be controlled if the SHUTTER setting is above 1/30.

7 3D DNR (3D DIGITAL NOISE REDUCTION)

OFF/LOW/MIDDLE/HIGH - 3D-DNR reduces the noise on the screen in low light conditions and allows for clearer images, even at night.

WB MODE

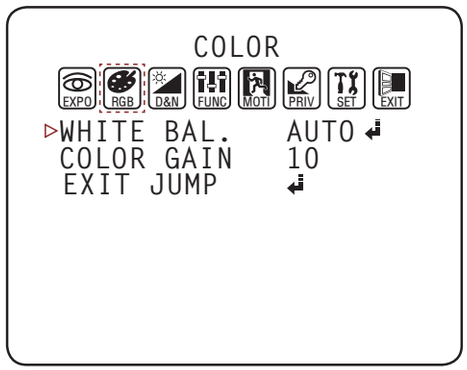

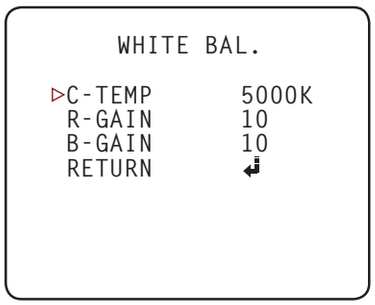

AUTO Auto Tracking White Balance Control mode compensates for color temperature changes between 2500K ° and 12000K ° .

AUTO-EX Auto White Balance Control mode compensates for color temperature changes lower than 2500K ° and tigher than 12000K ° .

PRESET Preset fixes the white balance based on the current lighting automatically.

MANUAL Users can control the white balance manually by changing RED GAIN and BLUE GAIN. (see blow)
C-TEMP: Select the color temperature for the white balance setup. If enabled,
the Red and Blue Gain settings will be set automatically according to the C-TEMP selected.
RED GAIN: 0 ~ 20. Adjusts the amount of red in the image.
BLUE GAIN: 0 ~ 20. Adjust the amount of blue in the image.

COLOR GAIN Set the color gain from 0~20.

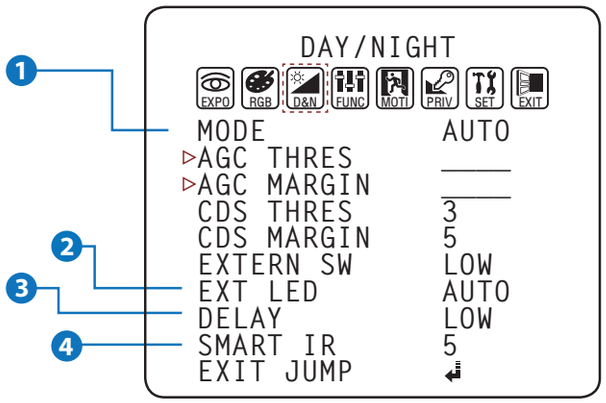

1 MODE

AUTO : Day/ Night switch will be based on the CDS levels.
COLOR : The camera always stays in day/color mode.
B&W : The camera always stays in night/B&W mode.
EXTERN : Day/ Night switch will be based on using IR LED lights.
* WITHOUT LED
- AGC Threshold : Set when the camera switches between Day & Night.
- AGC Margin : Set the value added to the AGC Threshold. Adjust the value based on the environment in which the camera is installed. If the margin is too low, the camera will switch from color to B/W and back.
* WITH LED
- CDS Threshold : Marks the light level at which the camera will switch between color and B/W. The lower the value, the camera will require less light (more darkness) to switch to Night Mode.
- CDS Margin : The value added to the CDS Threshold. Adjust this based on the environment in which the camera is installed. If the margin is too low, the camera will switch from color to B/W and back.

2 EXT LED

AUTO : The LEDs are enabled/ disabled by the CDS Sensor on the LED Board.
OFF : The camera's LEDs are disabled manually.

3 DELAY

Low/Mid/High : Time interval delay before switching from day mode to night mode.

4 SMART IR

0 ~ 20 : Enable Smart IR and set the level. Higher values will make Smart IR stronger.

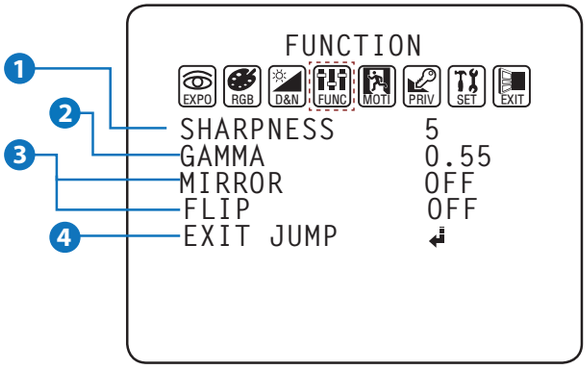

1 SHARPNESS
0 ~ 10 - Sets the image sharpness. The higher the number, the sharper the image.

2 GAMMA
0.45 ~ 0.75 - Select the desired gamma level. 0.55 is default setting.

3 MIRROR / FLIP
OFF
MIRROR : Reflects the camera horizontally.
FLIP : Reflects the camera vertically.

Mirror / Flip OFF Mirror ON Flip ON Mirror & Flip ON

The camera can detect movement and display an alarm on the screen. when movement is detected.

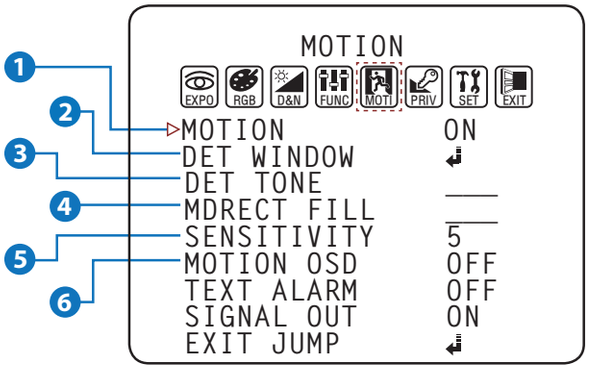

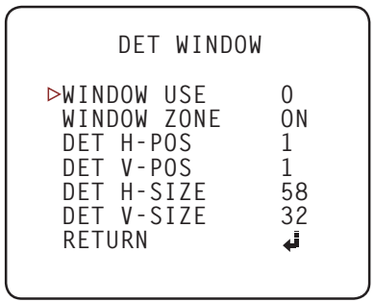

1 MOTION
To use the motion detection settings, be fore Motion is ON.

2 DET WINDOW
MOTION ZONE setting

3 DET TONE
Four each different motion tone color available

4 MDRECT FILL
Color setting for operating motion zone

5 SENSITIVITY
The smaller the movement you want to detect, the higher the sensitivity value must be.

6 MOTION OSD
MOTION ZONE display.
MOTION OSD interoperable with 'DET TONE' and 'MDRECT FILL'.

7 TEXT ALARM
Setup a text to appear on the screen when motion is detected explaining the alarm situation.
- WINDOW MOTION: Will appear when a motion alarm is detected.
- CAMERA MOVING : Will appear if the camera is shaken abruptly.

8 SIGNAL OUT (ON / OFF)
- ON : 'HIGH' SIGNAL OUT upon ALARM.
- OFF : 'SIGNAL OUT' off regardless of ALARM

You can hide some parts of the screen for privacy masking. A total of 16 different privacy masking zones are available. The cameras support square privacy masks or advanced polygon masks.

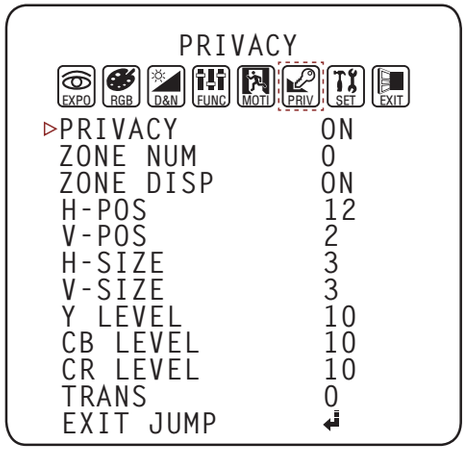

- ZONE NUM : Select the zone number between 0~15.
- ZONE DISP : Zone display ON/OFF
- H-POS : Move the Zone position Left or right. The higher the number, the zone will move to the right.
- V-POS : Move the Zone position up or down. The higher the number, the zone will move down.
- H-SIZE : Reset the zone's size horizontally. The higher the number, the right side panel will move further to the right.
- V-SIZE : Reset the zone's size vertically. The higher the number, the bottom side panel will move further down.
- Y LEVEL : The higher the number, the brighter the color will appear.
- CR LEVEL : The higher the number, the more red tone will be added to the zone's color.
  The lower the number, the more green will be added to the zone's color.
- CB LEVEL : The higher the number, the more red tone will be added to the zone's color.
  The lower the number, the more red will be added to the zone's color.

* High CB Level + High CR Level = Pink
* High CB Level + Low CR Level = Sky Blue
* Low CB Level + High CR Level = Orange

- TRANS : Set the mask's transparency level from 0~3. The default value is 0.

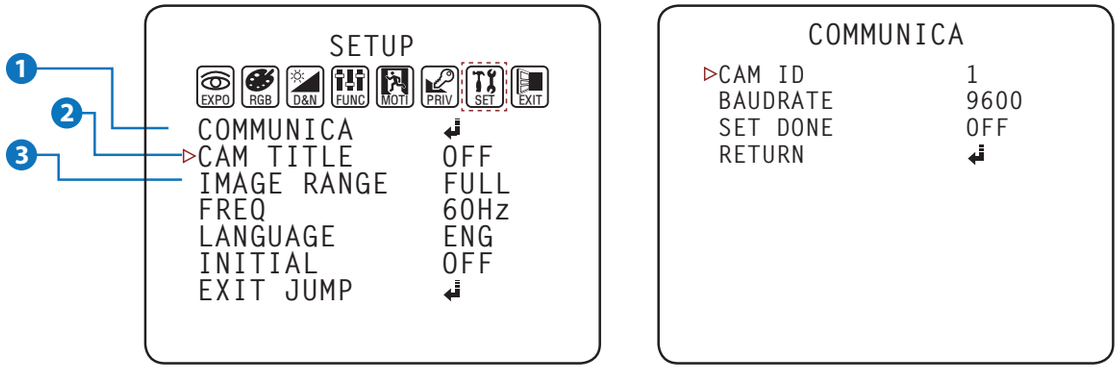

1 COMMUNICATION

Adjust the camera's ID and Baudrate. Default Protocol is Pelco-D.

- CAM ID : Provide an ID number for the camera (0 ~ 255).
- BAUDRATE : 9600bps is default. Select the baudrate from the following options :
  2400/4800/9600/57600/115200 bps.
- SET DONE : Set the value of CAM ID and BAUDRATE.

※ **NOTE:** Be sure to press "Save&Exit" button on the EXIT menu before saving.

2 CAM. TITLE

Add a name to the camera. Set the title by using the OSD joystick.

3 IMAGE RANGE

Image Range allows you to set the proper Black and White levels according to the external display you use.

- FULL : Display all BLACK level and WHITE level without compression.
- COMP : Display BLACK level and WHITE level with compression.
- USER : Reset the BLACK level by changing the OFFSET value.

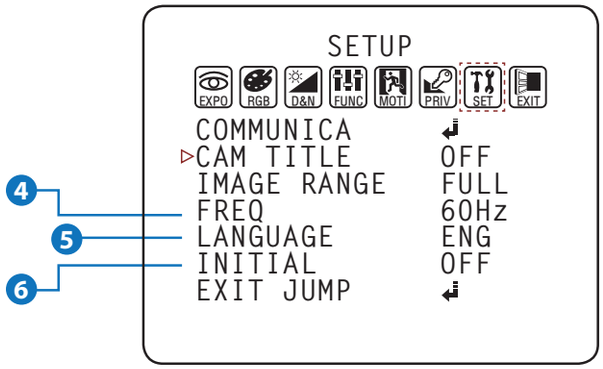

4 FREQ
When the camera's image appears to have flickering issues, change the frequency value to adjust the image.

5 LANGUAGE
Select from the following: English (Default), Chinese, Chinese (S), Japanese, and Koran.

6 INITIAL
Reset the camera to its default settings. Press and hold the select button for five (5) seconds.

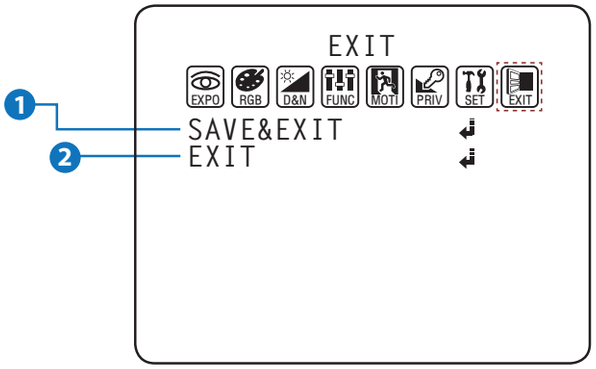

1 **SAVE & EXIT**
Exit the OSD menu after saving the recent changes.

2 **EXIT**
Exit the OSD menu without saving any changes.

Troubleshooting

Before sending your camera for repair, check the following or contact our technical specialist.

FOR NO VIDEO

Check the coaxial cable and make sure it is connected securely.
Check the power supply and make sure the camera has the proper voltage and current.
Check UTP/COAX switch inside the camera's housing and confirm the switch's position matches the signal connection type.

FOR OUT-OF-FOCUS VIDEO

Check the Front case cover and the lens for dirt or fingerprints.
Use a soft cloth and gently clean.
The use of a field test monitor is recommended.

Specifications

VIDEO	
Image Sensor	1/3” CMOS Sensors
Active Pixels	1944(H) x 1092(V)
Scanning System	Progressive scan
Freguency	60Hz / 50Hz
Signal Technology	2.0 Megapixel Universal
Synchronization	Internal
Resolution	1920x1080 (1080p30fps)
Minimum Scene Illumination	F1.4 (30IRE): 0.03 Lux (Color) F1.4 (30IRE): 0 Lux (B&W)
Video Output	Universal (Coax/UTP) HD-A/HD-TVI/HD-CVI/CVBS / CVBS
LENS	
Focal Length & Lens Type	2.8~12mm, P-Iris Vari-Focal
IR Distance	100ft
OPERATIONAL	
Alarm Output	1 Alarm Output
Shutter Speed	1/30(25) - 1/30,000
Backlight	OFF/HME/BLC/WDR
Sens-up	OFF, x2 - x32
Wide Dynamic Range(WDR)	LOW/MIDDLE/HIGH

OPERATIONAL (CONT.)		
Digital Noise Reduction		OFF / LOW / MIDDLE / HIGH
White Balance		AUTO / AUTO-EX / PRESET / MANUAL
Day and Night		AUTO / COLOR / BW / EXTERN
Auto Gain Control		0 ~ 10
Motion Detection		ON/OFF (4 Zones)
Privacy Zones		ON/OFF (Box 16 Zones)
Sharpness		0 ~ 10
Gamma		0.45 ~ 0.75
Remote Control		RS485 / Coaxial (UTC)
ENVIRONMENTAL		
Operating Temperature Operating Humidity		-20°C ~ 50°C (-4°F ~ 122°F) No more than 90% (Non-Condensing)
IP Rating		IP66
Other Certifications		FCC, CE, ROHS
ELECTRICAL		
Power Requirements		DC12V / AC24V Dual Voltage
Power Consumption	DC12V	3.0W, 250mA, LED On : 4.44W, 370mA
	AC24V	2.7W, 160mA, LED On : 4.3W, 255mA
MECHANICAL		
Housing Material and Dimensions		Aluminum, 224.5 x 96.7Ømm (8.84 x 3.81Ø in)
Weight		1.43 lbs

Specifications

VIDEO	
Image Sensor	1/3” CMOS Sensors
Active Pixels	1944(H) x 1092(V)
Scanning System	Progressive scan
Freguency	60Hz / 50Hz
Signal Technology	2.0 Megapixel Universal
Synchronization	Internal
Resolution	1920x1080 (1080p30fps)
Minimum Scene Illumination	F1.6 (30IRE): 0.039 Lux (Color)
	F1.6 (30IRE): 0 Lux (B&W)
S/N Ratio	55dB
Video Output	Universal (Coax/UTP) HD-A/HD-TVI/HD-CVI/CVBS / CVBS
LENS	
Focal Length & Lens Type	6~50mm, P-Iris Vari-Focal
IR Distance	150ft
OPERATIONAL	
Alarm Output	1 Alarm Output
Shutter Speed	1/30(25) - 1/30,000
Backlight	OFF/HME/BLC/WDR
Sens-up	OFF, x2 - x32
Wide Dynamic Range(WDR)	LOW/MIDDLE/HIGH

OPERATIONAL (CONT.)		
Digital Noise Reduction		OFF / LOW / MIDDLE / HIGH
White Balance		AUTO / AUTO-EX / PRESET / MANUAL
Day and Night		AUTO / COLOR / BW / EXTERN
Auto Gain Control		0 ~ 10
Motion Detection		ON/OFF (4 Zones)
Privacy Zones		ON/OFF (16 Zones)
Sharpness		0 ~ 10
Gamma		0.45 ~ 0.75
Remote Control		RS485 / Coaxial (UTC)
ENVIRONMENTAL		
Operating Temperature Operating Humidity		-20°C ~ 50°C (-4°F ~ 122°F) No more than 90% (Non-Condensing)
IP Rating		IP66
Other Certifications		FCC, CE, ROHS
ELECTRICAL		
Power Requirements		DC12V / AC24V Dual Voltage
Power Consumption	DC12V	3.0W, 250mA, LED On : 6.0W, 500mA
	AC24V	2.7W, 160mA, LED On : 5.5W, 320mA
MECHANICAL		
Housing Material and Dimensions		Aluminum, 252 x 96.7Ømm (9.92 x 3.81Ø in)
Weight		1.65 lbs

Limits and Exclusions

There are no express warranties except as listed. The warranter will not be liable for incidental or consequential damages (including damage to recording media without limitation) resulting from the use of these products or arising out of any breach of the warranty. All express and implied warranties, including the warranties of merchantability and fitness for particular purpose, are limited to the applicable warranty period set forth above.

Some states do not allow the exclusion or limitation of incidental or consequential damages, or limitations on how long an implied warranty lasts, so the exclusions or limitations listed above may not apply to you. This warranty gives you specific legal rights, and you may also have other rights that vary from state-to-state.

If the problem is not handled to your satisfaction, then write to the following address:

Digital Watchdog, Inc.
ATTN: RMA Department
5436 W. Crenshaw Street
Tampa, FL 33634

Service calls which do not involve defective materials or workmanship as determined by the Warranter, in its sole discretion, are not covered. Costs of such service calls are the responsibility of the purchaser.

Warranty Information

Go to https://digital-watchdog.com/page/rma-landing-page/ to learn more about Digital Watchdog's warranty and RMA.
To obtain warranty or out of warranty service, please contact a technical support representative at:
1+ (866) 446-3595, Monday through Friday from 9:00 AM to 8:00 PM EST.
A purchase receipt or other proof of the date of the original purchase is required before warranty service is rendered. This warranty only covers failures due to defects in materials and workmanship which arise during normal use. This warranty does not cover damages that occurs in shipment or failures which are caused by products not supplied by the Warrantor or failures which result from accident, misuse, abuse, neglect, mishandling, misapplication, alteration, modification, faulty installation, setup adjustments, improper antenna, inadequate signal pickup, maladjustments of consumer controls, improper operation, power line surge, improper voltage supply, lightning damage, rental use of the product or service by anyone other than an authorized repair facility or damage that is attributable to acts of God.

DIGITAL WATCHDOG™

Complete Surveillance Solutions

DW® East Coast office and warehouse: 5436 W Crenshaw St, Tampa, FL USA 33634
DW® West Coast office and warehouse: 16220 Bloomfield Ave, Cerritos, CA USA 90703
PH: 866-446-3595 | FAX: 813-888-9262
www.Digital-Watchdog.com
dw-tech@digital-watchdog.com
Technical Support PH:
USA & Canada 1+ 866-446-3595
International 1+ 813-888-9555
French Canadian: + 1-904-999-1309
Technical Support Hours: Monday-Friday 9 a.m. to 8 p.m. Eastern Time