DIGITAL WATCHDOG®
Complete Surveillance Solutions

Star-Light Plus™ 5MP Universal HD over Coax® vandal ball camera

DWC-VA553WTIR

c UL us LISTED

STAR-LIGHT PLUS™

Color in Darkness Universal HD over Coax® cameras

User Manual ver.: 08/26

Before installing and using the camera, please read this manual carefully.
Be sure to keep it handy for future reference.

Contents

INTRODUCTION

03 Safety information
08 Features
09 Product and accessories
10 Parts names
11 Dimensions

INSTALLATION

12 Installation
13 Connecting the camera to monitors
14 Adjusting the camera's angle

OSD MENU

15 Menu tree
19 OSD menu - Exposure
20 OSD menu - Color
21 OSD menu - Day and night
22 OSD menu - Function
23 OSD menu - Motion
25 OSD menu - Privacy
27 OSD menu - Setup
29 OSD menu - Exit

APPENDIX

30 Troubleshooting
31 Product Specifications
33 Limits and exclusions
34 Warranty

Safety Information

CAUTION

RISK OF ELECTRIC SHOCK. DO NOT OPEN

CAUTION:

TO REDUCE THE RISK OF ELECTRIC SHOCK, DO NOT REMOVE COVER (OR BACK) NO USER SERVICEABLE PARTS INSIDE. REFER SERVICING TO QUALIFIED SERVICE PERSONNEL.

This symbol indicates that dangerous voltage consisting a risk of electric shock is present within this unit.

This exclamation point symbol is intended to alert the user to the presence of important operating and maintenance (servicing) instructions in the literature accompanying the appliance

WARNING

To prevent damage which may result in fire or electric shock hazard, do not expose this appliance to rain or moisture.

WARNING

1. Be sure to use only the standard adapter that is specified in the specification sheet. Using any other adapter could cause fire, electrical shock, or damage to the product.
2. Incorrectly connecting the power supply or replacing battery may cause explosion, fire, electric shock, or damage to the product.
3. Do not connect multiple cameras to a single adapter. Exceeding the capacity may cause abnormal heat generation or fire.
4. Securely plug the power cord into the power receptacle. Insecure connection may cause fire.
5. When installing the camera, fasten it securely and firmly. A falling camera may cause personal injury.
6. Do not place conductive objects (e.g. screw drivers, coins, metal things, etc.) or containers filled with water on top of the camera. Doing so may cause personal injury due to fire, electric shock, or falling objects.

7. Do not install the unit in humid, dusty, or sooty locations.
   Doing so may cause fire or electric shock.

8. If any unusual smells or smoke come from the unit, stop using the product.
   In such case, immediately disconnect the power source and contact the service center. Continued use in such a condition may cause fire or electric shock.

9. If this product fails to operate normally, contact the nearest service center.
   Never disassemble or modify this product in any way.

10. When cleaning, do not spray water directly onto parts of the product.
    Doing so may cause fire or electric shock.

PRECAUTION

Operating

· Before using, make sure power supply and all other parts are properly connected.

· While operating, if any abnormal condition or malfunction is observed, stop using the camera immediately and contact your dealer.

Handling

· Do not disassemble or tamper with parts inside the camera.

· Do not drop the camera or subject it to shock or vibration as this can damage the camera.

· Clean the clear Lens cover with extra care. Scratches and dust can ruin the quality of the camera image.

Installation and Storage

· Do not install the camera in areas of extreme temperature, exceeding the allowed range.

· Avoid installing in humid or dusty environments.

· Avoid installing in places where radiation is present.

· Avoid installing in places where there are strong magnetic fields and electric signals.

· Avoid installing in places where the camera would be subject to strong vibrations.

· Never expose the camera to rain or water.

Important Safety Instructions

1. Read these instructions.
   - All these safety and operating instructions should be read before the product is installed or operated.
2. Keep these instructions.
   - The safety, operating and use instructions should be retained for future reference.
3. Heed all warnings.
   - All warnings on the product and in the operating instructions should be adhered to.
4. Follow all instructions.
   - All operating and use instructions should be followed.
5. Do not use this device near water.
   - For example : near a bath tub, wash bowl, kitchen sink, laundry tub, in a wet basement, near a swimming pool, etc.
6. Clean only with dry cloth.
   - Unplug this product from the wall outlet before cleaning. Do not use liquid cleaners.
7. Do not block any ventilation openings. Install in accordance with the manufacturer's instructions.
   - Slots and openings in the cabinet are provided for ventilation, to ensure reliable operation of the product, and to protect it from over-heating. The openings should never be blocked by placing the product on bed, sofa, rug or other similar surface. This product should not be placed in a built-in installation such as a bookcase or rack unless proper ventilation is provided and the manufacturer's instructions have been adhere to.
8. Do not install near any heat sources such as radiators, heat registers, or other apparatus (including amplifiers) that produce heat.
9. Do not defeat the safety purpose of the polarized or grounding-type plug. A polarized plug has two blades with one wider than the other. A grounding type plug has two blades and a third grounding prong. The wide blade or the third prong are provided for your safety. If the provided plug does not fit into your outlet, consult an electrician for replacement of the obsolete outlet.
10. Protect the power cord from being walked on or pinched particularly at plugs, convenience receptacles, and the point where they exit from the apparatus.

11. Only use attachments/accessories specified by the manufacturer.

12. Use only with cart, stand, tripod, bracket, or table specified by the manufacturer, or sold with the apparatus.
    When a cart is used, use caution when moving the cart / apparatus combination to avoid injury from tip-over.

13. Unplug this apparatus during lightning storms or when unused for long periods of time.

14. Refer all servicing to qualified service personnel. Servicing is required when the apparatus has been damaged in any way, such as power supply cord or plug is damaged, liquid has been spilled or objects have fallen into the apparatus, the apparatus has been exposed to rain or moisture, does not operate normally, or has been dropped.

Disposal of Old Appliances

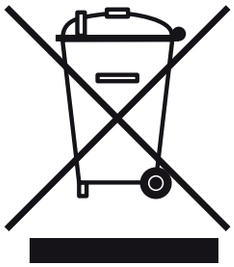

1. When this crossed-out wheel bin symbol is attached to a product it means the product is covered by the European Directive 2002/96/EC.
2. All electrical and electronic products should be disposed of separately form the municipal waste stream in accordance to laws designated by the government or the local authorities.
3. The correct disposal of your old appliance will help prevent potential negative consequences for the environment and human health.
4. For more detailed information about disposal of your old appliance, please contact your city office, waste disposal service or the shop where you purchased the product.

FC CE

This equipment has been tested and found to comply with the limits for a Class A digital device, pursuant to part 15 of the FCC Rules.
These limits are designed to provide reasonable protection against harmful interference when the equipment is operated in a commercial environment.
This equipment generates, uses, and can radiate radio frequency energy and, if not installed and used in accordance with the instruction manual, may cause harmful interference to radio communications.
Operation of this equipment in a residential area is likely to cause harmful interference in which case the user will be required to correct the interferenece at his own expense.

Features

- Universal HD over Coax® technology with HD-Analog, HD-TVI, HD-CVI and all analog to 960H signal support
- Star-Light Plus™ color in darkness technology
- 1/2.8" image sensor
- 5MP at 20fps, 4MP at real-time 30fps
- 4.0mm fixed lens
- True wide dynamic range (WDR)
- OSD control via coaxial (UTC)
- 70' Smart IR™ with intelligent camera sync.
- Smart DNR™ 3D digital noise reduction
- True day/night mechanical IR cut filter
- De-Fog™ extreme weather image compensation
- Programmable privacy zones
- Auto gain control (AGC)
- Backlight compensation (BLC)
- Auto white balance (AWB)
- IP67 dust-tight and water-proof to 1 meter
- IK 10-rated impact-resistant
- 5 year warranty

Product and Accessories

※ Please check if all the camera and accessories are included in the package.

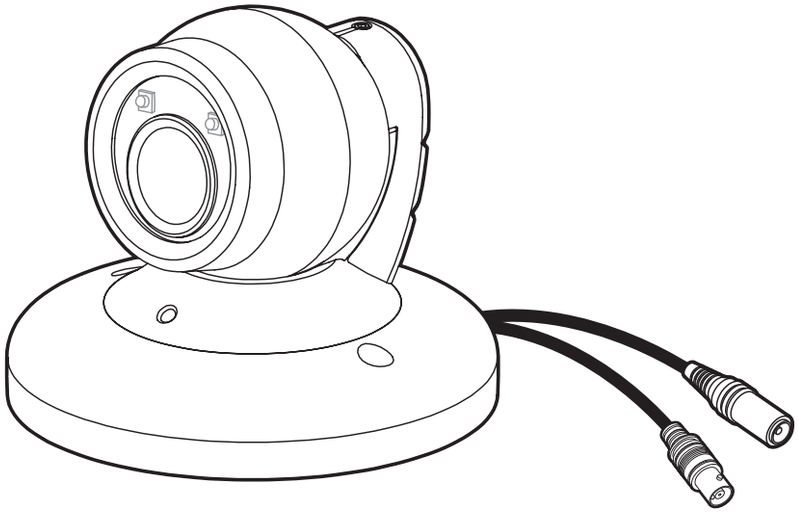

Camera

Cables

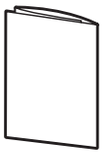

Quick setup guide

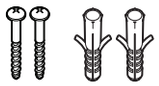

Screws and plastic anchors-2pcs

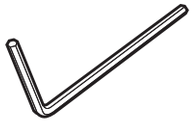

Torque wrench

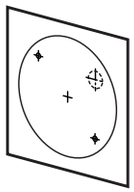

Mounting template

Part name (DWC-V7553W)

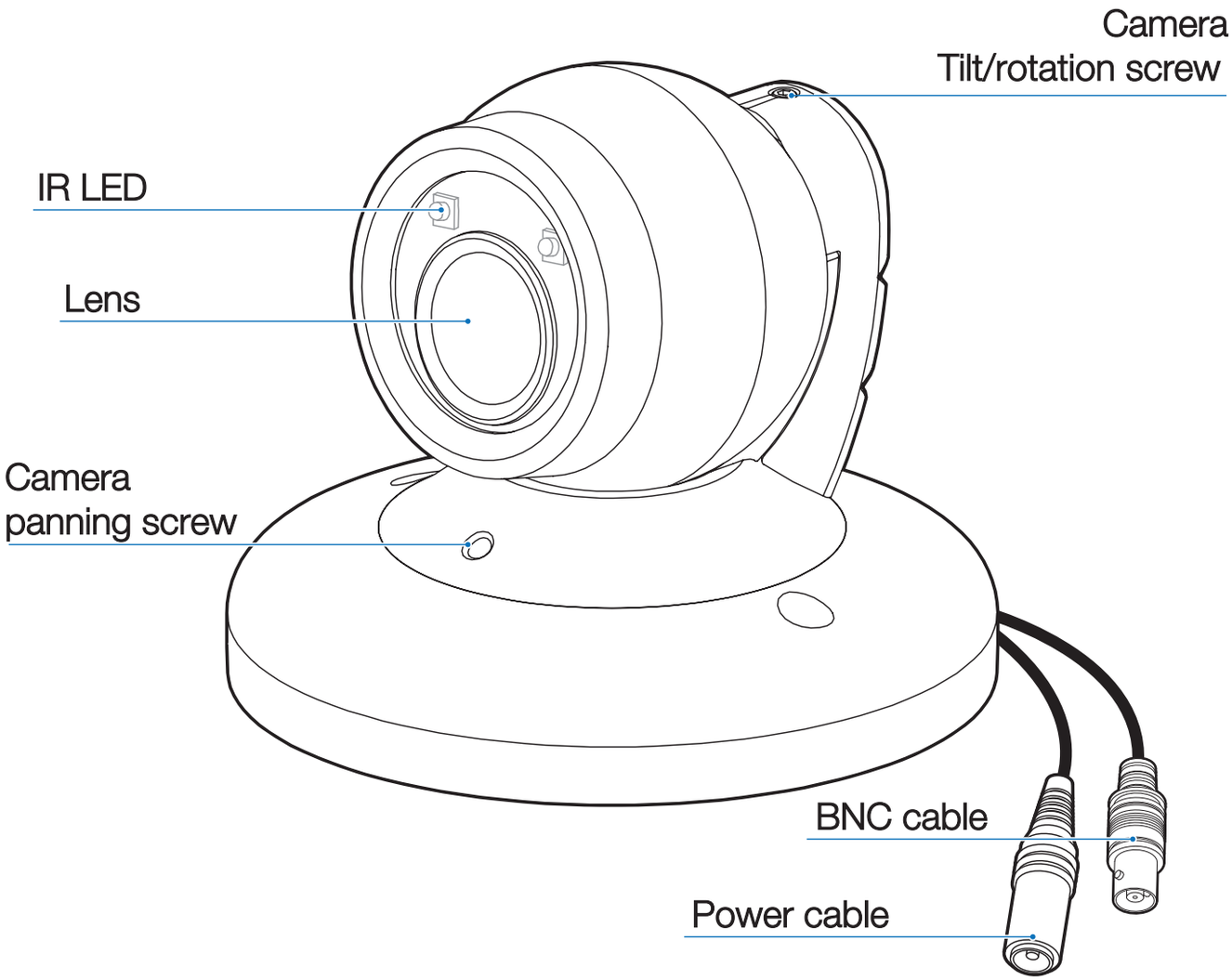

Dimension

Unit: inches (mm)

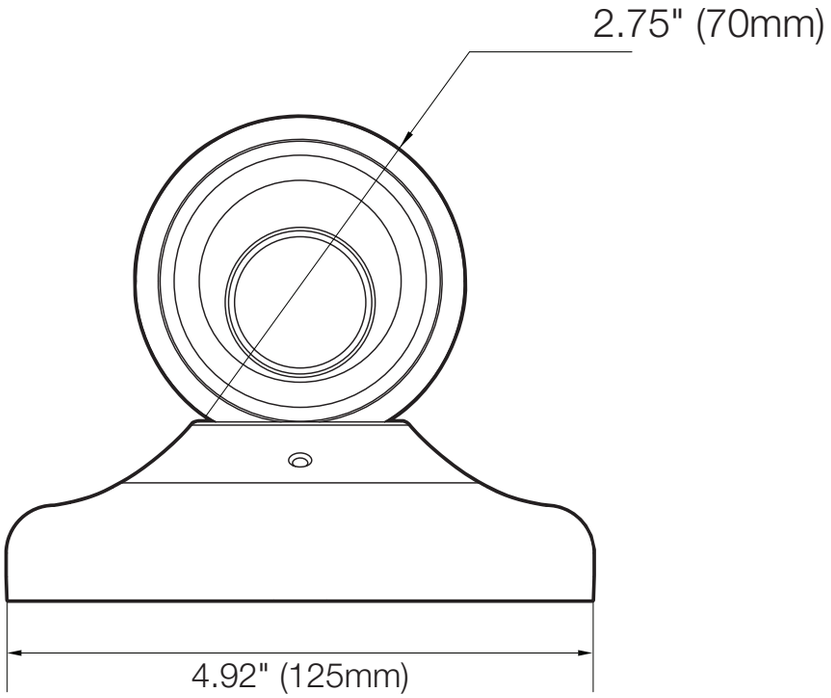

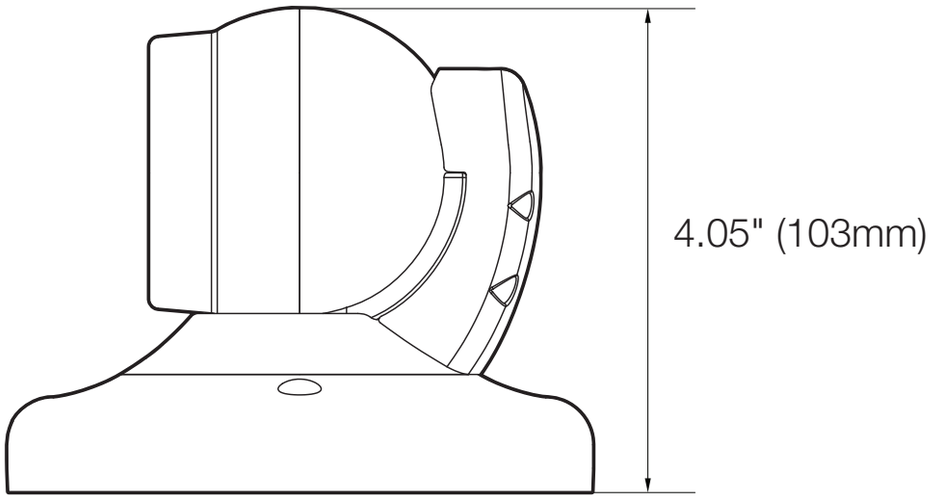

Installation - Instructions

1. Using the mounting template or your camera, mark and drill the necessary holes to mount the bracket to a wall or ceiling.

2. Pull a necessary wires through and make the proper connections. See pages 14-15.

3. Use the three mounting screws to install the camera on the wall or ceiling. See page 16 for tilting and pan adjustment options.

4. Adjust the camera's tilt and rotation as needed. See page 16 for more information.

5. When the installation is completed, place the camera's dome over the camera's body by clicking the dome into place.

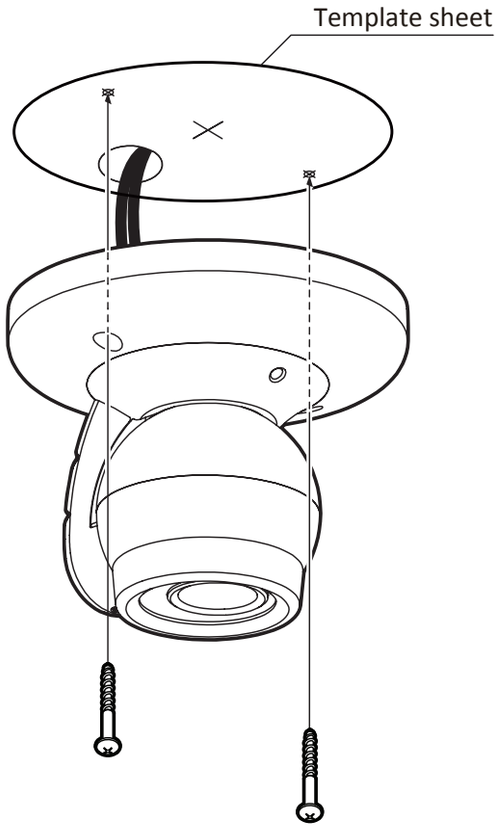

Connecting to Monitors

Use the diagram below to connect the camera to a Universal HD over Coax® DVR.

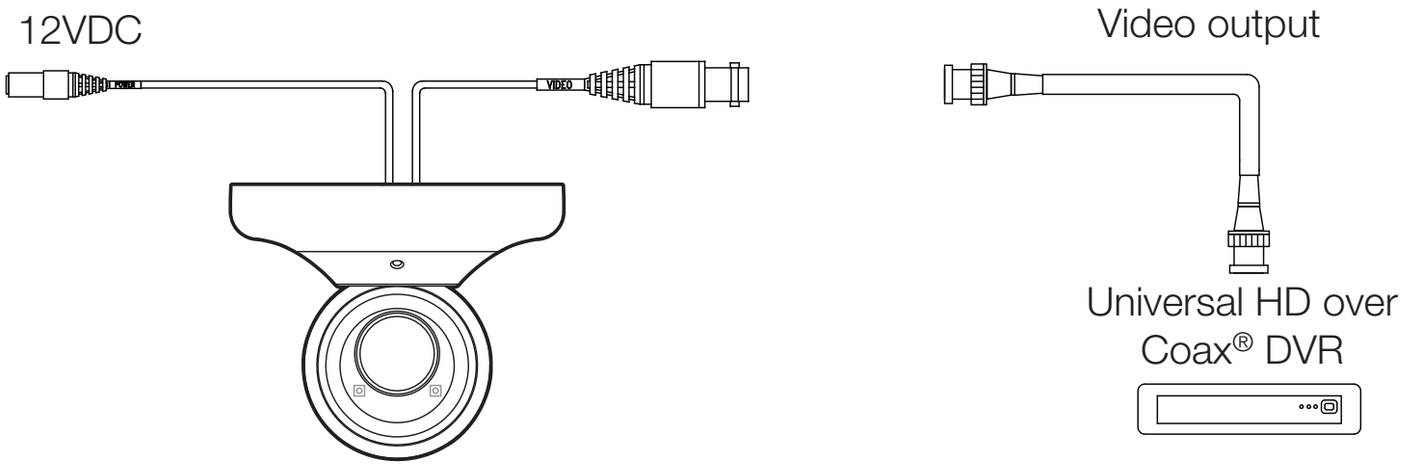

- Power connection - the camera supports 12VDC voltage only.
- All cameras are equipped with a test video output for on-site configuration.

※ **NOTE:** To use your Star-Light Plus™ 5MP cameras at a lower resolution, you must use a VMAX® A1 Plus™ DVR to access the camera's menu due to the cameras being set to 5MP as the default. A DVR that does not support 5MP resolution may recognize the camera, but will not deliver a picture.

Adjusting the camera angle

Adjust the camera angle while the camera is fixed on the ceiling.
Loosen the pan and tilt screw at the base of the camera a little before moving the camera module.
Pan is used to rotate the camera's body to left and right, and tilt is used to adjust the tilt. Rotating the lens by its axis is called rotation.

- Panning: 360°
- Rotation: 360°
- Tilting: 90°

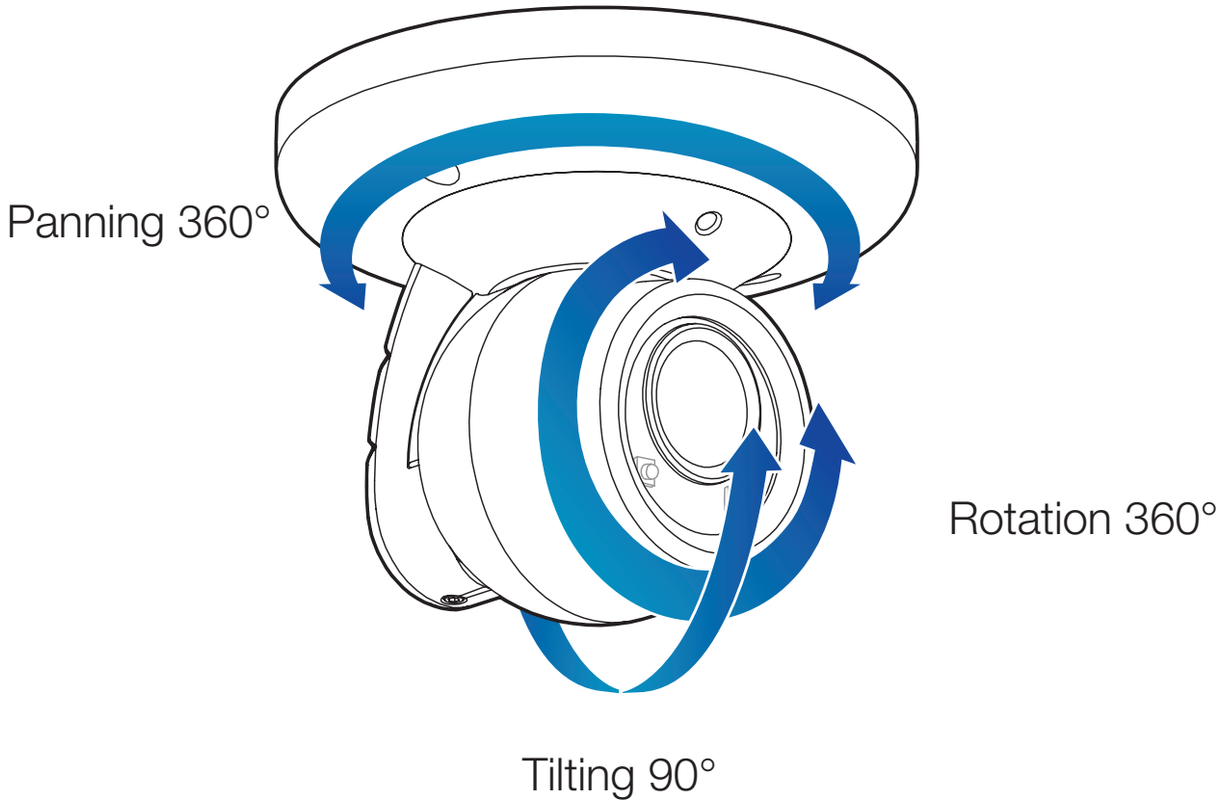

OSD Menu Tree

EXPOSURE

LENS	MANUAL / AUTO
EDGE DET	OFF / ON
BRIGHTNESS	0 ~ 20
SHUTTER	AUTO / MANUAL / FLICKER
BACK-LIGHT	OFF / HME / BLC / WDR
STAR-LIGHT	OFF / x2 ~ x32
AGC	0 ~ 10
3D DNR	OFF / LOW / MIDDLE / HIGH
RETURN	

COLOR

WHITE BAL.	AUTO / AUTOext / PRESET / MANUAL
COLOR GAIN	0 ~ 20
RETURN	

DAY & NIGHT (IR OPTION)

MODE	AUTO / COLOR / B&W
IR LED	ON / OFF
SMART IR	0 ~20
D>N THRES	0~ 20
N>D THRES	0 ~ 20
DELAY	LOW / MIDDLE / HIGH
RETURN	

FUNCTION

SHARPNESS	0 ~ 10
GAMMA	0.45 ~ 0.75
MIRROR	OFF / ON
FLIP	OFF / ON
D-ZOOM	X1.0 ~ X16.0
DRC	OFF / ON
DEFOG	OFF / ON
RETURN	

OSD Menu Tree

MOTION

DET WINDOWS	
SENSITIVITY	0 ~ 10
MOTION OSD	OFF / ON
TEXT ALARM	OFF / ON
SIGNAL OUT	OFF / ON
RETURN	

PRIVACY

BOX	OFF / ON
POLYGON	OFF / ON
RETURN	

SETUP

COMM.	CAM ID / BAUDRATE / CONFIRM
OUTPUT	FRAME RATE / FREQ / ANALOG MODE / CONFIRM
LANGUAGE	ENG / CHN / CHN(S) / JPN / KOR
CAM TITLE	RIGHT UP / LEFT DOWN
RESET	OFF / ON
RETURN	

EXIT

SAVE & EXIT
EXIT
RETURN

❶ Lens

Manual: Manual mode supports the fixed board lens or the manual iris lens.

Auto: AUTO mode sets the camera's iris automatically.

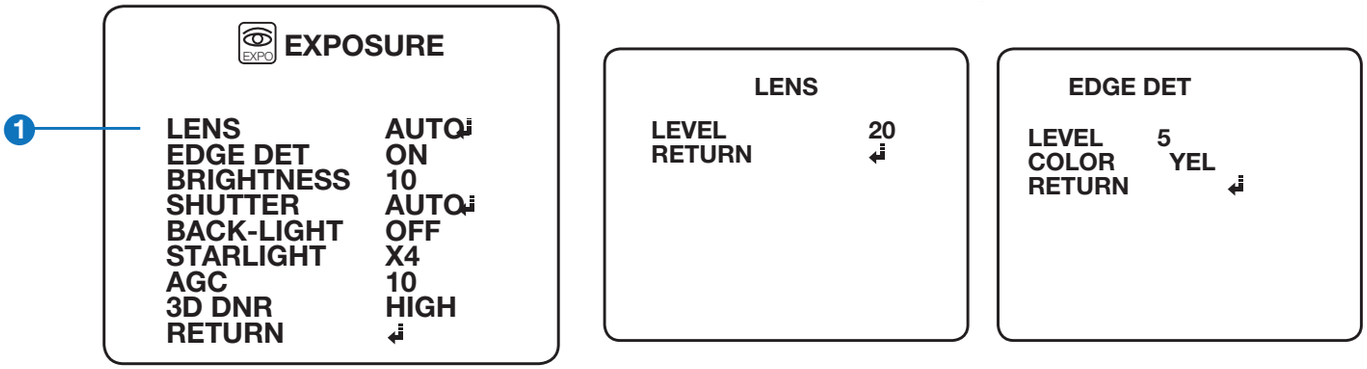

Under the lens sub-menu, you can adjust the following settings:

Level

Change the camera's iris value manually. If auto is selected, this option is disabled.

Edge DET

Adjust the camera's focus according to the camera's view.

- Level: Set the focus range.
- Color: Set the color to be displayed in the focus range from: yellow, cyan, green, magenta, red, blue, black or white.

Brightness

0 ~ 20: The higher the number, the brighter the image will appear.

Shutter

Set the shutter speed to auto, manual or flicker mode.

- Auto: If selected, adjust the following options :
  - Normal: Set when the camera is installed in an indoor environment.
  - De-blur: Set when the camera is installed in an outdoor environment.
- Flicker: Select when the camera is experiencing flickering in the image. The shutter speed will be set automatically to 1/100.
- Manual: If selected, set the shutter speed from the options: 1/30 ~ 1/30000.

❸ Back-light

Off

HME (highlight masking exposure)

HME allows objects to appear clearly on the screen by masking extremely bright areas.
To setup HME, set the level and color of the HME mask. The lower the number, the darker the areas have to be in order to be masked. Select from: 0 ~ 20.
Color: Set the color of the HME masks. Select from: black, white, yellow, cyan, green, magenta, red and blue.

BLC (back-light compensation)

If BLC is selected, adjust the size and position of the BLC mask:

- H-POS: Move the mask's position left or right. The higher the number, the mask will move to the right.
- V-POS: Move the mask's position up or down. The higher the number, the mask will move down.
- H-Size: Adjust the mask's width. The higher the number, the right side panel of the mask will move further to the right.
- V-Size: Adjust the mask's height. The higher the number, the bottom side panel of the mask will move further down.

WDR (Wide Dynamic Range)

If WDR is selected, adjust the WDR level (weight) in the sub-menu. Select from low, middle, or high (default).

- WDR mode: Line (sensor WDR), frame (double scan WDR)
- ROI mode: Enable WDR only in a set interest area.
- Weight: Available only in when normal mode is selected.

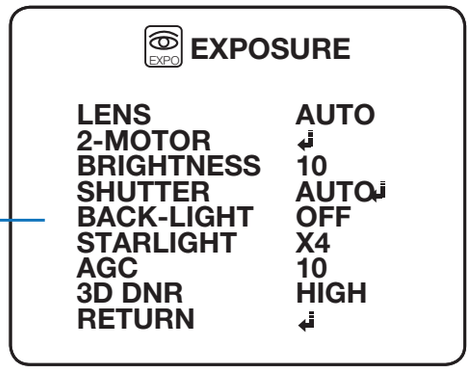

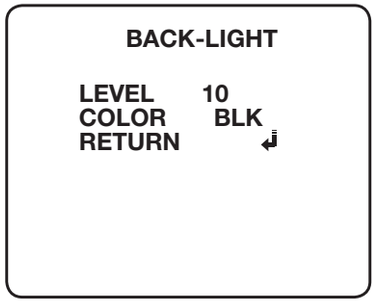

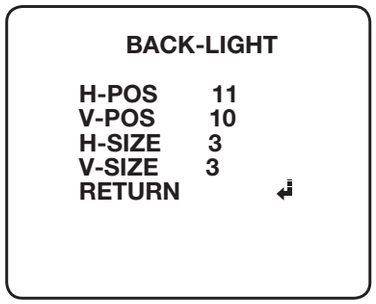

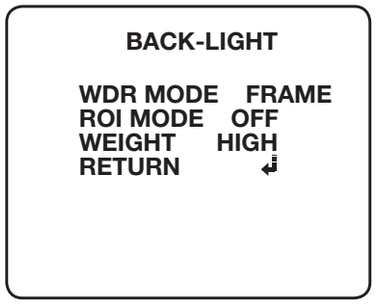

※ ROI (region of interest)

For a more efficient WDR distribution across the scene, you can setup up to 4 WDR regions.

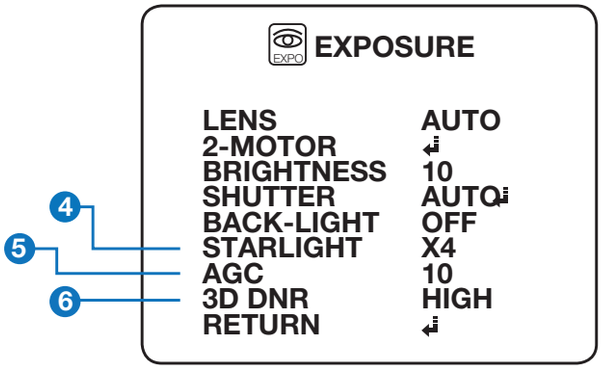

❹ Star-Light™

Off / x2 ~ x32 (default : x4) - Automatically activate the camera's slow shutter when the image is too dark. High values are not recommended as they may causes the image to lag and increase digital noise. The Star-Light™ menu cannot be controlled if the shutter settings are above 1/30.

❺ AGC (auto gain control)

0~10 - AGC enhances the picture brightness in low light conditions. A higher level AGC will make the image brighter. This could also increase the amount of digital noise in the image.

❻ 3D DNR (3D digital noise reduction)

Off, low, middle, high - 3D-DNR reduces digital noise on the camera's view in low light conditions and allows for clearer images, even at night.

WB mode

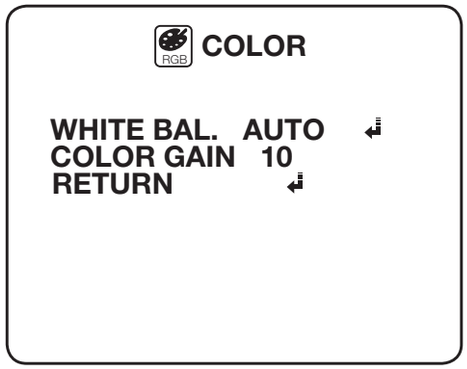

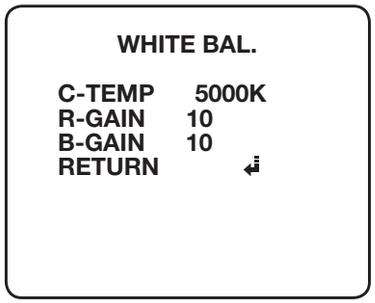

Auto Compensates for color temperature changes between 2400K° and 12000K°.

AUTOext Compensates for color temperature changes under 2400K° and over 12000K°.

Preset Automatically set the white balance based on the current lighting conditions.

Manual Manually set the white balance by changing red gain and blue gain.

C-Temp: Select the color temperature for the white balance setup. If enabled, the red and blue gain settings will be set automatically according to the C-TEMP selected.

Red gain: 0 ~ 20. Adjusts the amount of red in the image.

Blue gain: 0 ~ 20. Adjust the amount of blue in the image.

Color gain Set the color gain from 0~20.

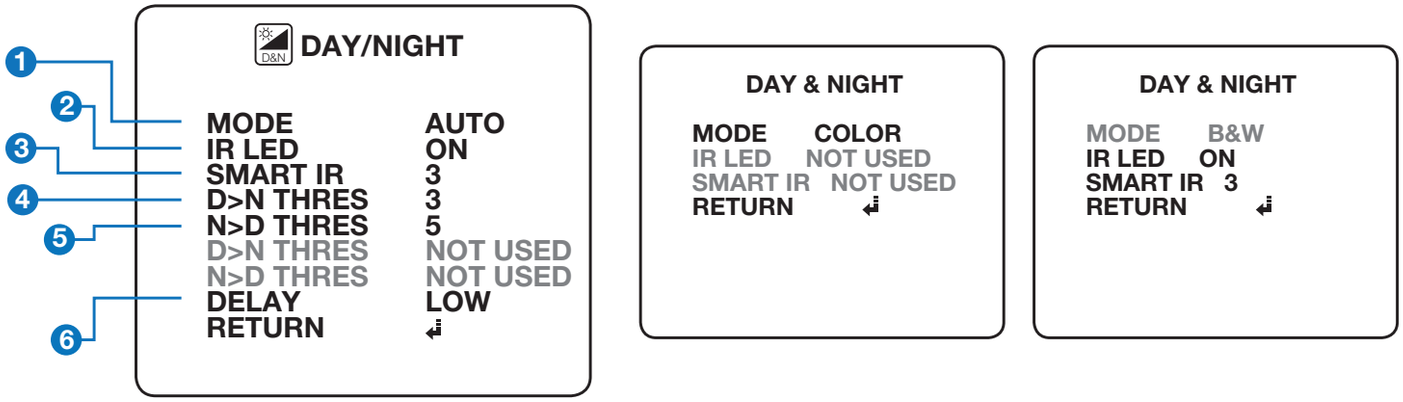

❶ Mode

Auto: The camera will switch between day and night modes according to the CDS levels.
Color: The camera will remain in color/day mode.
B&W: The camera will remain in B/W/night mode.

❷ IR LED

On, off: Enable or disable the IR LEDs in the camera.

❸ Smart IR™

Setting the level for the Smart IR™ function.

❹ D>N THRES

Adjust the time settings when the camera will switch from color to BW mode.

❺ N>D THRES

Adjust the time settings when the camera will switch from BW to color mode.

❻ Delay

Set a delay for when the camera switches between day and night modes.

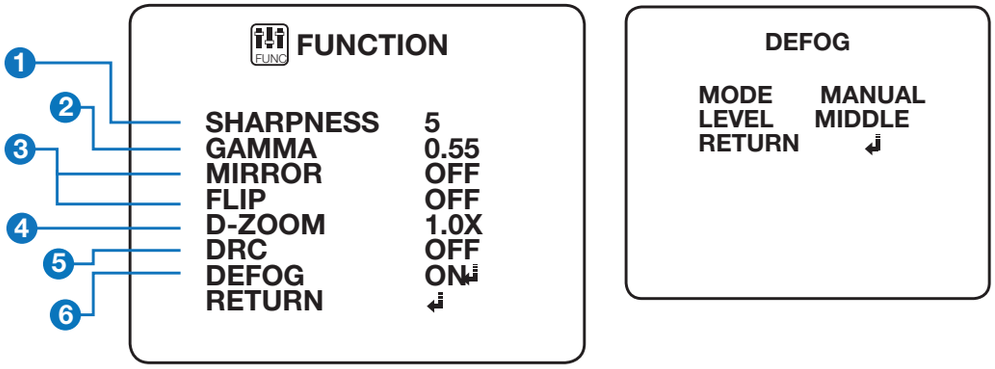

❶ Sharpness

0 ~ 10: Set the image's sharpness. The higher the number, the sharper the image.

❷ Gamma

0.45 ~ 0.75: Select the desired gamma level. 0.55 is the default setting.

❸ Mirror, flip

Off

Mirror: Reflects the camera horizontally.

Flip: Reflects the camera vertically.

Mirror and flip
Off

Mirror
On

Flip
On

Mirror and flip
On

❹ D-Zoom

1.0x ~ 16.0x: Sets the digital zoom.

❺ DRC (digital image stabilizer)

Low, middle, high: Set the DRC levels.

❻ DEFOG

Off, on: Set the De-fog levels.

OSD Menu_Motion

The camera can detect movement and display an alarm on the screen when movement is detected.

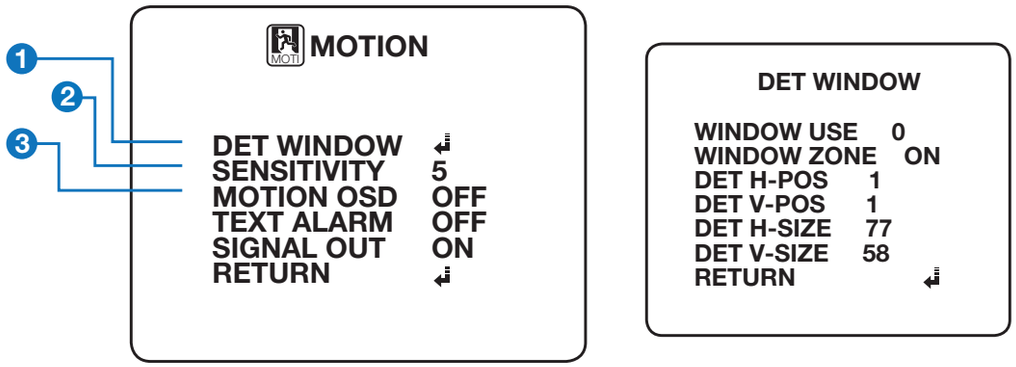

❶ DET window

- Window use: Select which one of the motion areas to enable.
- Window zone: The camera supports up to 4 different masks. Select which ones to display.
  - DET H-POS: Move the zone's position left or right. The higher the number, the zone will move to the right.
  - DET V-POS: Move the zone's position up or down. The higher the number, the zone will move down.
  - DET H-Size: Adjust the zone's width. The higher the number, the right side panel of the zone will move further to the right.
  - DET V-Size: Adjust the zone's height. The higher the number, the bottom side panel of the zone will move further down.

❷ Sensitivity

The smaller the movement you want to detect, the higher the sensitivity value must be.

❸ Motion OSD

Enable or disable showing the motion detection on the camera's OSD.

The camera can detect movement and display an alarm on the screen when movement is detected.

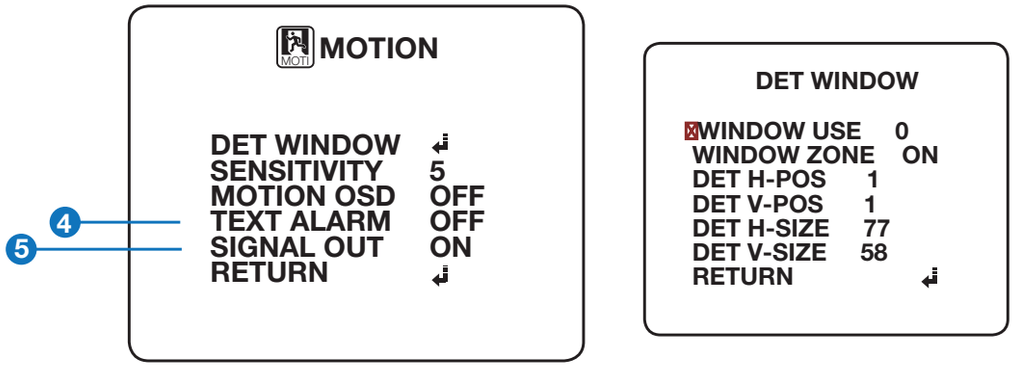

❹ Text alarm

Setup a text to appear on the screen when motion is detected.

- Window motion: Will appear when a motion alarm is detected in the set motion window.
- Camera moving: Will appear if the camera is shaken abruptly.
- Bright change: Will appear if the camera detects sudden changes in brightness.

❺ Signal out (off, on)

- Off: Signal output is disable regardless of motion detection.
- On: Signal output will be activated when motion is detection in the motion window.

You can hide some parts of the camera's view to protect privacy and sensitive data. A total of 24 privacy masking zones are available, including 16 square zones and 8 polygon shaped zones.

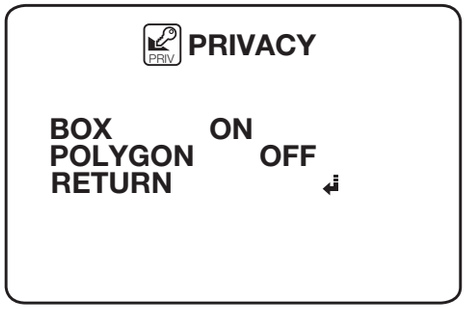

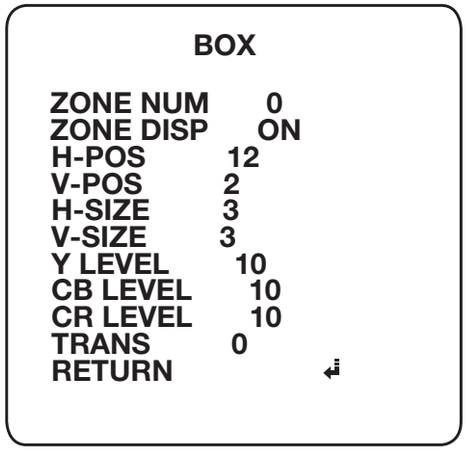

❶ Box

- Zone num: Select the zone number between 0~15.
- Zone disp: Select to show or hide the selected zone.
- H-POS: Move the zone's position left or right. The higher the number, the zone will move to the right.
- V-POS: Move the zone's position up or down. The higher the number, the zone will move down.
- H-Size: Adjust the zone's width. The higher the number, the right side panel of the zone will move further to the right.
- V-Size: Adjust the zone's height. The higher the number, the bottom side panel of the zone will move further down.
- Y level: The higher the number, the brighter the color of the zone will appear.
- CR level: The higher the number, the more red tone will be added to the zone's color. The lower the number, the more green will be added to the zone's color.
- CB level: The higher the number, the more red tone will be added to the zone's color. The lower the number, the more red will be added to the zone's color.
- Trans: Set the mask's transparency level from 0~3. The default value is 0.

You can hide some parts of the camera's view to protect privacy and sensitive data. A total of 24 privacy masking zones are available, including 16 square zones and 8 polygon shaped zones.

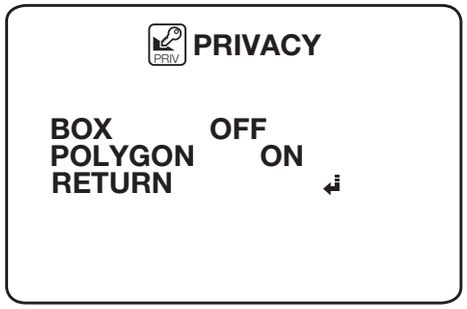

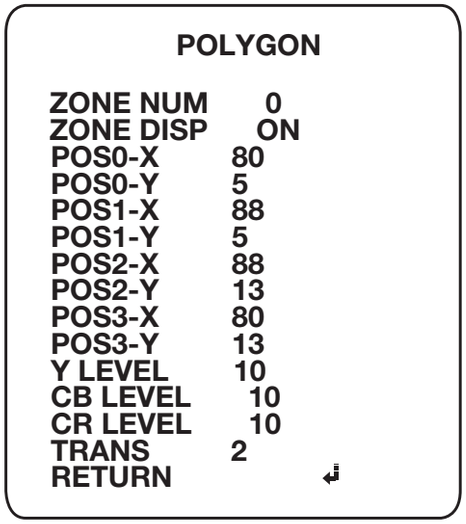

❶ Polygon

- Zone num: Select the zone number between 0~7.
- Zone disp: Select to show or hide the selected zone.
- POS0-X: Move the zone's upper left angle left and right.
- POS0-Y: Move the zone's upper left angle up and down.
- POS1-X: Move the zone's upper right angle left and right.
- POS1-Y: Move the zone's upper right angle up and down.
- POS2-X: Move the zone's lower right angle left and right.
- POS2-Y: Move the zone's lower right angle up and down.
- POS3-X: Move the zone's lower left angle left and right.
- POS3-Y: Move the zone's lower left angle up and down.
- Y level: The higher the number, the brighter the color of the zone will appear.
- CR level: The higher the number, the more red tone will be added to the zone's color.
  The lower the number, the more green will be added to the zone's color.
- CB level: The higher the number, the more red tone will be added to the zone's color.
  The lower the number, the more red will be added to the zone's color.
- Trans: Set the mask's transparency level from 0~3. The default value is 2.

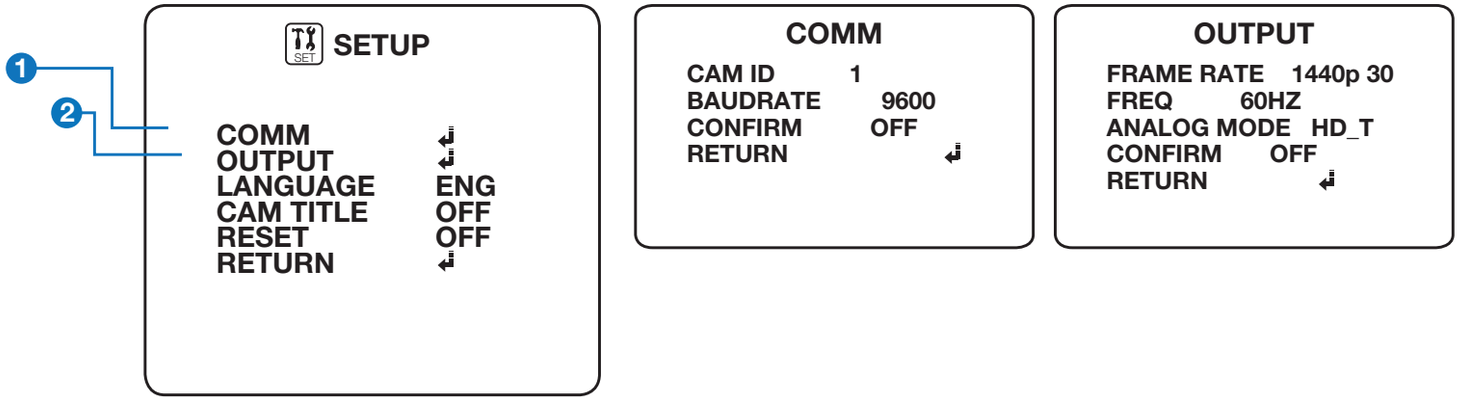

❶ COMM

Adjust the camera's ID and baudrate. The camera's default protocol is Pelco-D.

- Cam ID: Provide an ID number for the camera (0 ~ 255).
- Baudrate: Select the baudrate from the following options: 2400, 4800, 9600 (default), 57600 and 115200 bps.
- Confirm: Off, on

※ **NOTE :** Set confirm to "on" after setting the camera's ID and baudrate.
Be sure to press "Save&Exit" button on the EXIT Menu.

❷ Output

- Framerate: Set the camera's display frame rate and resolution. Select from: 5MP/1944p_20 (HD-A/HD-T only), 4MP/1440_30P, 2.1MP/1080p_30, 720p_30.
- FREQ: When the camera's image appears flickering, you can change its frequency to adjust the image. Select from 60HZ and 50HZ.
- Analog mode: Set the camera's video signal output:
  HD-A: HD-Analog (supports up to 5MP @ 20fps)
  HD-T: HD-TVI (supports up to 5MP @ 20fps)
  HD-C: HD-CVI (supports up to 4MP @ 30fps)
- Confirm: Off, on

※ **NOTE :** Set confirm to "on" after setting the camera's output values.
Be sure to press "Save&Exit" button on the EXIT Menu.

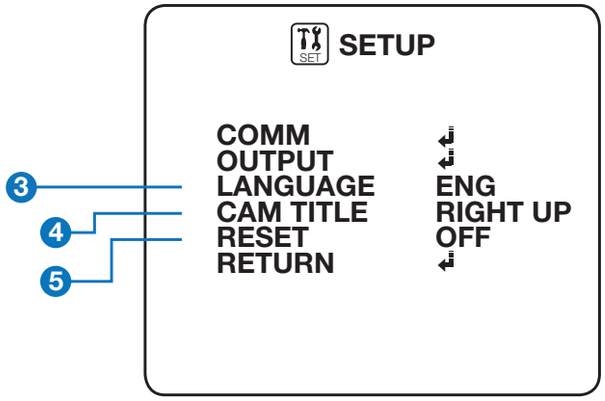

❸ Language

Select from the following: English (default), Chinese, Chinese (S), Japanese and Korean.

❹ CAM title

Add a name to the camera.

❺ Reset

Reset the camera to its default settings.

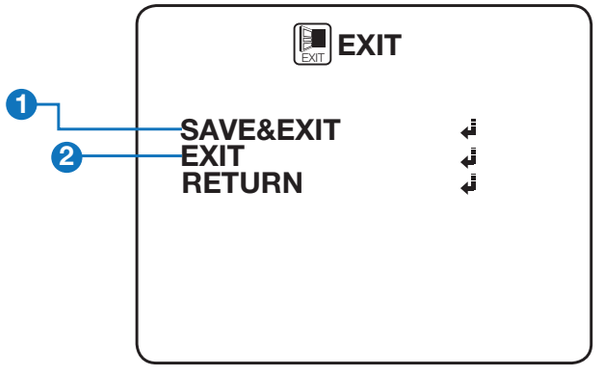

1 Save and exit

Exit the OSD menu after saving the recent changes.

2 Exit

Exit the OSD menu without saving any changes.

Troubleshooting

Before sending your camera for repair, check the following or contact our technical specialist.

FOR NO VIDEO

Check the coaxial cable and make sure it is connected securely.
Check the power supply and make sure the camera has the proper voltage and current. Check UTP/COAX switch inside the camera's housing and confirm the switch's position matches the signal connection type.

FOR OUT-OF-FOCUS VIDEO

Check the Front case cover and the lens for dirt or fingerprints.
Use a soft cloth and gently clean.
The use of a field test monitor is recommended.

WHEN CHANGING VIDEO SIGNAL

To use your Star-Light Plus™ 5MP cameras at a lower resolution, you must use a VMAX® A1 Plus™ DVR to access the camera's menu due to the cameras being set to 5MP as the default. A DVR that does not support 5MP resolution may recognize the camera, but will not deliver a picture.

Specifications

VIDEO	
Image sensor	1/2.8” CMOS sensor
Active pixels	2608(H) x 1960(V)
Scanning system	Progressive scan
Frequency	60Hz / 50Hz
Signal technology	Max 5.MP Universal
Synchronization	Internal
Resolution	2592x1944 (1944p(20fps) (CVI Max 1440p)/1440p30(25)fps/ 1080p30(25)fps/720p30(25)fps)
Minimum scene illumination	F2.0 (30IRE): 0.16 lux (color)
	F2.0 (30IRE): 0 lux (B&W)
Video output	BNC (Universal: HD-A/HD-TVI/HD-CVI)
LENS	
Focal length and lens type	4.0mm, fixed lens
IR distance	70ft
OPERATIONAL	
Alarm output	-
Shutter speed	1/30(25) - 1/30,000
Backlight	OFF/HME/BLC/WDR
Star-Light™	OFF, x2 - x32
Wide Dynamic Range(WDR)	LOW/MIDDLE/HIGH

OPERATIONAL (CONT.)	
Digital Noise Reduction	OFF / LOW / MIDDLE / HIGH
White balance	AUTO / AUTOext / PRESET / MANUAL
Day and night	AUTO / COLOR / BW
Auto gain control	0 ~ 10
Motion detection	ON/OFF (4 zones)
Privacy zones	ON/OFF (box 16 zones / polygon 8 zones)
Sharpness	0 ~ 10
Gamma	0.45 ~ 0.75
Remote control	Coaxial (UTC)
ENVIRONMENTAL	
Operating temperature operating humidity	-4°F ~ 122°F (-20°C ~ 50°C) no more than 90% (non-condensing)
IP rating	IP67
Other certifications	FCC, CE, ROHS
ELECTRICAL	
Power requirements	DC12V only
Power consumption	LED off: 1.89W, 157mA LED on: 4.26W, 355mA
MECHANICAL	
Housing material and dimensions	Aluminum, 4.92 x 4.05 in (125 x 103mm)
Weight	1.17 lbs

Limits and Exclusions

There are no express warranties except as listed. The warranter will not be liable for incidental or consequential damages (including damage to recording media without limitation) resulting from the use of these products or arising out of any breach of the warranty. All express and implied warranties, including the warranties of merchantability and fitness for particular purpose, are limited to the applicable warranty period set forth above.

Some states do not allow the exclusion or limitation of incidental or consequential damages, or limitations on how long an implied warranty lasts, so the exclusions or limitations listed above may not apply to you. This warranty gives you specific legal rights, and you may also have other rights that vary from state-to-state.

If the problem is not handled to your satisfaction, then write to the following address:

Digital Watchdog, Inc.
ATTN: RMA Department
5436 W. Crenshaw Street
Tampa, FL 33634

Service calls which do not involve defective materials or workmanship as determined by the Warranter, in its sole discretion, are not covered. Costs of such service calls are the responsibility of the purchaser.

Warranty Information

Digital Watchdog (referred to as “the Warranter”) warrants the Digital Watchdog Camera against defects in materials or workmanship as follows:

LABOR: For the initial five (5) years and one (1) year on IR LED from the original purchase date, if the camera is determined to be defective, the Warranter will repair or replace the unit with a new or refurbished product at its option at no charge.

PARTS: In addition, the Warranter will supply replacement parts for the initial five (5) years and one (1) year on IR LED.

To obtain warranty or out of warranty service, please contact a Technical Support Representative at 1+ (866)446-3595 Monday through Friday from 9:00AM to 8:00PM Eastern Standard Time.

A purchase receipt or other proof of the original purchase date is required before warranty service is rendered. This warranty only covers failures due to defects in materials and workmanship which arise during normal use. This warranty does not cover damage which occurs in shipment or failures which are caused by products not supplied by the Warranter or failures which result from accident, misuse, abuse, neglect, mishandling, misapplication, alteration, modification, faulty installation, set-up adjustments, improper antenna, inadequate signal pickup, maladjustment of consumer controls, improper operation, power line surge, improper voltage supply, lightning damage, rental use of the product or service by anyone other than an authorized repair facility or damage that is attributable to acts of God.

DIGITAL WATCHDOG™

Complete Surveillance Solutions

East Coast Headquarters Office: 5436 W Crenshaw St, Tampa, FL 33634
West Coast Headquarters Office: 16220 Bloomfield Ave., Cerritos, CA 90703
PH: 866-446-35951 FAX: 813-888-9262
www.Digital-Watchdog.com Technical Support:
USA & Canada +1(904) 999-1309
International 1+ (813) 888-9555
French Canadian 1+ (514) 360-1309
Support Hours: Monday-Friday 9:00am to 8:00pm EST