MEGApix® Ai™ 4K Vandal Dome IP Camera

DWC-XSDE08Mi - 4K vandal dome IP camera

DWC-XSDE08MiCx - CloudCam 4K vandal dome IP camera with up to 1TB recording storage

User's Manual Ver. 08/26

Before installing and using the camera, please read this manual carefully.
Be sure to keep it handy for future reference.

Safety Information

Read this first

Read through this Installation Guide carefully before installing the product. Keep the Installation Guide for future reference. See the complete user manual for more information on the proper installation, use and care of the product.

These instructions are intended to ensure that users can use the product correctly to avoid danger or property loss. The precaution measure is divided into “Warnings” and “Cautions”:

Warnings: Serious injury or death may occur if any of the warnings are neglected.

Cautions: Injury or equipment damage may occur if any of the cautions are neglected.

CAUTION

RISK OF ELECTRIC SHOCK.
DO NOT OPEN.

CAUTION:

TO REDUCE THE RISK OF ELECTRIC SHOCK, DO NOT REMOVE COVER (OR BACK) NO USER SERVICEABLE PARTS INSIDE. REFER SERVICING TO QUALIFIED SERVICE PERSONNEL.

Warning

This symbol indicates that dangerous voltage consisting of a risk of electric shock is present within this unit.

Precaution

This exclamation point symbol is intended to alert the user to the presence of important operating and maintenance (servicing) instructions in the literature accompanying the appliance.

WARNING

1. In the use of the product, you must be in strict compliance with the electrical safety regulations of the nation and region. When the product is mounted on a wall or ceiling, the device shall be firmly fixed.
2. Be sure to use only the standard adapter specified in the specification sheet. Using any other adapter could cause fire, electrical shock, or damage to the product.
3. Make sure the power supply voltage is correct before using the camera.
4. Incorrectly connecting the power supply or replacing the battery may cause an explosion, fire, electric shock, or damage to the product.
5. Do not connect multiple cameras to a single adapter. Exceeding the capacity may cause excessive heat generation or fire.
6. Securely plug the power cord into the power source. An insecure connection may cause a fire.
7. When installing the camera, fasten it securely and firmly. A falling camera may cause personal injury.
8. Do not install in a location subject to elevated temperature, low temperature, or high humidity. Doing so may cause fire or electric shock.
9. Do not place conductive objects (e.g. screwdrivers, coins, metal items, etc.) or containers filled with water on top of the camera. Doing so may cause personal injury due to fire, electric shock, or falling objects.
10. Do not install the unit in humid, dusty, or sooty locations. Doing so may cause fire or electric shock.
11. Do not install near any heat sources such as radiators, heat registers, or other products (including amplifiers) that produce heat.
12. Keep out of direct sunlight and heat radiation sources. It may cause a fire.
13. If any unusual smells or smoke come from the unit, stop using the product at once. Immediately disconnect the power source and contact the service center. Continued use in such a condition may cause fire or electric shock.
14. If this product does not operate normally, contact the nearest service center. Never disassemble or change this product in any way.
15. When cleaning the product, do not spray water directly onto parts of the product. Doing so may cause fire or electric shock.

Precaution

1. Use proper safety gear when installing and wiring the product.
2. Do not drop objects on the product or apply strong shock to it. Keep away from a location subject to excessive vibration or magnetic interference.
3. Do not use this product near water.
4. The product shall not be exposed to dripping or splashing and no objects filled with liquids, such as vases, shall be placed on the product.
5. Avoid aiming the camera directly towards extremely bright objects such as the sun, as this may damage the image sensor.
6. The Main plug is used as a disconnect device and shall stay readily operable at any time.
7. Remove the power adapter from the outlet when there is lightning. Neglecting to do so may cause fire or damage to the product.
8. Do not block any ventilation openings. Install following the manufacturer’s instructions.
9. A polarized or grounding-type plug is recommended for this product. A polarized plug has two blades with one wider than the other. A grounding-type plug has two blades and a third grounding prong. If the provided plug does not fit into your outlet, consult an electrician for replacement.

Important Safety Instructions

1. Protect the power cord from being walked on or pinched particularly at plugs, convenience receptacles, and the point where they exit from the product.
2. If any laser equipment is used near the product, make sure the surface of the sensor is not exposed to the laser beam as that may damage the sensor module.
3. If you want to move the already installed product, be sure to turn off the power and then move or reinstall it.
4. Proper configuration of all passwords and other security settings is the responsibility of the installer and/or end-user.
5. If cleaning is necessary, please use a clean cloth to wipe it gently. If the device will not be used for a long time, please cover the lens cap to protect the device from dirt.
6. Do not touch the camera's lens or sensor module with your fingers. If cleaning is necessary, please use a clean cloth to wipe it gently. If the device will not be used for a long time, please cover the lens cap to protect the device from dirt.
7. Use only attachments/accessories specified by the manufacturer.
8. Always use hardware (e.g. screws, anchors, bolts, locking nuts, etc.) compatible with the mounting surface and of sufficient length and construction to ensure a secure mount.
9. Use only with cart, stand, tripod, bracket, or table specified by the manufacturer, or sold with the product.
10. Unplug this product when a cart is used. Use caution when moving the cart/product combination to avoid injury from tip-over.
11. Refer all servicing to qualified service personnel. Servicing is needed when the product has been damaged in any way, such as a power supply cord or plug is damaged, liquid has been spilled or objects have fallen into the product, the product has been exposed to rain or moisture, does not operate normally, or has been dropped.

Copyright © Digital Watchdog 2023. All rights reserved. Specifications and pricing are subject to change without notice.

Legal considerations

Video surveillance can be regulated by laws that vary by region. Check the laws in your local region before using this product for surveillance purposes.

Liability

Regarding the preparation of this document, Digital Watchdog cannot be held responsible for any technical or typographical errors and reserves the right to make changes to the product and manuals without notice.

Digital Watchdog makes no warranty of any kind regarding the written material contained within this document. Digital Watchdog shall not be held liable nor responsible for any incidental or consequential damages in connection with the furnishing, performance, or use of this documented material. This product is only to be used for its intended purpose.

Equipment modifications

This equipment must be installed and used in strict accordance with the instructions given in the user documentation. Changes or modifications not expressly approved by the party responsible for compliance could void the user's authority to use the equipment.

Trademark acknowledgments

Digital Watchdog, DW, DW Spectrum, MEGApix and Star-Light are registered trademarks or trademark applications of Digital Watchdog in various jurisdictions.

microSD, microSDHC, and microSDXC Logos are trademarks of SD-3C LLC. microSD, microSDHC and microSDXC are trademarks or registered trademarks of SD-3C, LLC in the United States, other countries, or both.

Regulatory Information

USA

This device complies with part 15 of the FCC Rules, subject to the following two conditions: (1) this device may not cause harmful interference, and (2) this device must accept any interference received, including interference that may cause undesired operation.

This equipment has been tested and found to comply with the limits for a Class B digital device, according to part 15 of the FCC Rules. These limits are designed to provide reasonable protection against harmful interference in a residential installation. This equipment generates, uses and can radiate radio frequency energy and, if not installed and used following the instructions, may cause harmful interference to radio communications. However, there is no guarantee that interference will not occur in a particular installation. If this equipment does cause harmful interference to radio or television reception, which can be determined by turning the equipment off and on, the user is encouraged to try to correct the interference by one or more of the following measures:

- Reorient or relocate the receiving antenna.
- Increase the separation between the equipment and receiver.
- Connect the equipment into an outlet on a circuit different from that to which the receiver is connected.
- Consult the dealer or an experienced radio/TV technician for help

Important Information

Canada
This digital apparatus complies with CAN ICES-3 (Class B). The product shall be connected using a shielded network cable (STP) that is properly grounded. Cet appareil numérique est conforme à la norme CAN NMB-3 (classe B). Le produit doit être connecté à l'aide d'un câble réseau blindé (STP) qui est correctement mis à la terre.

Safety
- This product is intended to be supplied by a UL Listed Power Supply Unit marked "Class 2" or "LPS" or "PS2" and rated 12 Vdc, 0.87Amin.
- The wired LAN hub provides power over the Ethernet (PoE) in accordance with IEEE 802.3af shall be a UL Listed device with the output evaluated as a Limited Power Source as defined in UL60950-1 or PS2 as defined in UL62368-1.
- CAUTION: These servicing instructions are for use by qualified service personnel only. To reduce the risk of electric shock do not perform any servicing other than that contained in the operating instructions unless you are qualified to do so.
- CAUTION: There is a risk of explosion if the battery is replaced incorrectly, and it should be replaced only with the same battery.
- Used batteries must be dispose of according to local regulations or the battery manufacturer's instructions. Disposing of batteries in a fire or in a hot oven, or mechanically crushing and cutting them may cause an explosion.
- Leaving the battery in very high temperature or low air pressure environments may result in an explosion or leak of flammable liquids or gases.
- Ce produit est destiné à être alimenté par un bloc d'alimentation homologué UL, marqué "Class 2" ou "LPS" ou "PS2" et d'une tension nominale de 12 Vdc, 0,87Amin.
- Le concentrateur LAN câblé fournit une alimentation par Ethernet (PoE) conformément à la norme IEEE 802.3af doit être un dispositif homologué UL dont la sortie est évaluée comme une source d'alimentation limitée telle que définie dans la norme UL60950-1 ou PS2 telle que définie dans la norme UL62368-1.
- MISE EN GARDE: Ces instructions d'entretien sont réservées à un personnel d'entretien qualifié. Pour réduire le risque de choc électrique, n'effectuez aucune opération d'entretien autre que celle décrite dans le mode d'emploi, à moins que vous ne soyez qualifié pour le faire.
- MISE EN GARDE: Il y a un risque d'explosion si la batterie est remplacée de manière incorrecte, et elle ne doit être remplacée que par la même batterie.
- Les piles usagées doivent être éliminées conformément aux réglementations locales ou aux instructions du fabricant de la pile. L'élimination des piles dans le feu ou dans un four chaud, ou le fait de les écraser ou de les couper mécaniquement peut provoquer une explosion.
- Laisser la batterie dans un environnement à très haute température ou à faible pression atmosphérique peut entraîner une explosion ou une fuite de liquides ou de gaz inflammables.
- **Disposal and recycling**
- Digital Watchdog cares for the environment at all product manufacturing stages and is taking measures to provide customers with more environmentally friendly products. When this product has reached the end of its useful life, dispose of it according to local laws and regulations. For information about your nearest designated collection point, contact your local authority responsible for waste disposal. Following local legislation, penalties may be applicable for incorrect disposal of this waste.

Warranty information
For information about Digital Watchdog's product warranty and related information, go to https://digital-watchdog.com/page/rma-landing-page/.
Regular part replacement: a few parts (e.g. electrolytic capacitor) of the equipment shall be replaced regularly according to their average enduring time. The average time varies because of differences between the operating environment and using history, so regular checking is recommended for all the users. Please contact your dealer for more details.

Support
Contact your Digital Watchdog installer or reseller for any questions, help and troubleshooting. If your questions cannot be answered at once, your installer will forward your questions to ensure a rapid response. If you are connected to the Internet, you can:
- Download user documentation and software updates from Digital Watchdog's website.
- Find answers to resolved problems in the FAQ database
- Visit Digital Watchdog's Support at https://digital-watchdog.com/DW-Tech-Support/.

Table of Contents

Introduction

Product and Accessories....6
Parts Names....7

Installation

Moisture Absorber Installation....8
Factory Reset....8
Installation....9
Cabling....12
Managing the SD Card....14

Network Setup

DW IP Finder....15

Web Viewer

Login to the Camera....16
GUI Overview....17

Camera Settings

Settings > Video and Audio Setup....20
Settings > Camera Setup > Image Adjustment....27
Settings > Camera Setup > Exposure Settings....28
Settings > Camera Setup > Day and Night Settings....29
Settings > Camera Setup > Backlight Settings....30
Settings > Camera Setup > White Balance Settings....31
Settings > Camera Setup > Image Enhancement Settings....32
Settings > Camera Setup > Video Enhancement Settings....33
Settings > Network Setup....34
Settings > Trigger Action Setup....45
Settings > Event Setup....49
Settings > Record Setup....53
Settings > Security Setup....60
Settings > System Setup > System Information....68
Settings > System Setup > Firmware....71
Settings > System Setup > Date and Time....72
Settings > System Setup > DST....73
Settings > System Setup > Users....74
Settings > System Setup > System Log....75
Settings > System Setup > Factory Reset....76
Settings > System Setup > Restart....77
Settings > System Setup > System Open Source License....78
Settings > System Setup > Plug-in....79

Appendix....80
FAQs....87
Dimensions....88
Specifications....89
Warranty....90
Limits and Exclusions....91

Introduction -
Product & Accessories

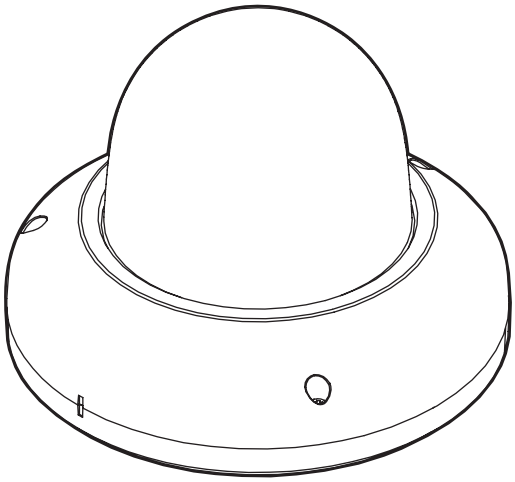

Vandal Dome
Camera

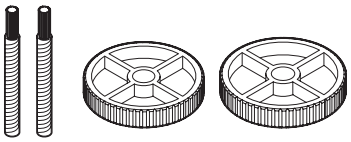

Mounting Bolts
and Screws

Grommet

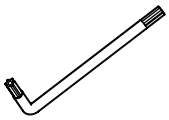

Star Wrench
(T-20)

Test Monitor Cable

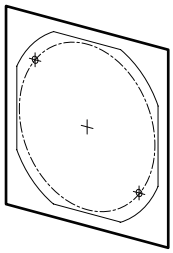

Mounting Template

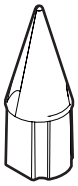

RJ-45 Installation
Tool

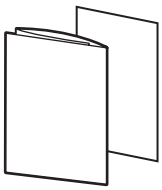

Quick Setup and
Download Guides

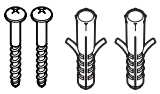

Screws and
Plastic Anchors - 2pcs

Moisture
Absorber and Installation
Guide (Recommended)

Introduction - Part Name

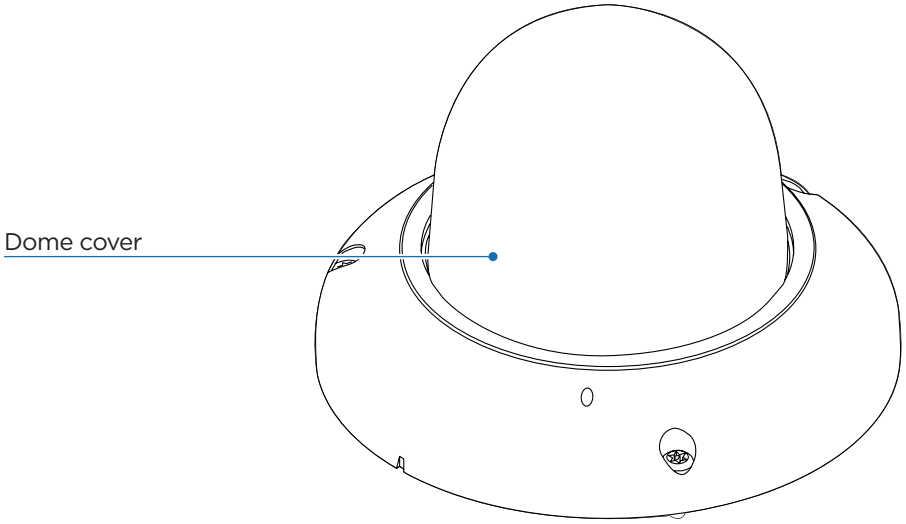

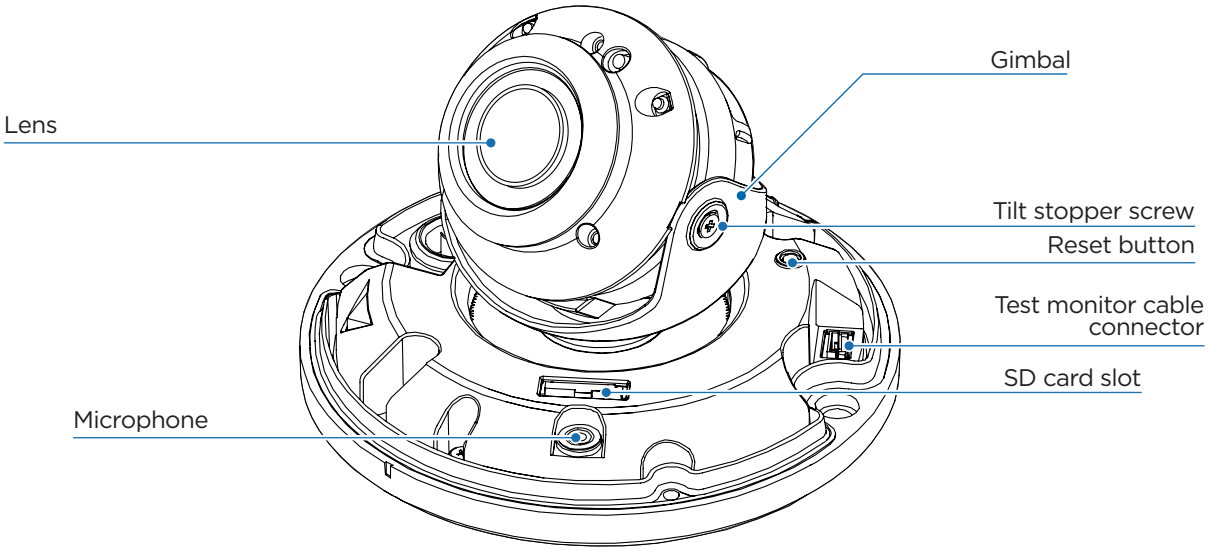

Installation - Disassemble the camera

1. The mounting surface must withstand five times the camera weight.
2. Do not let the cables get caught in improper places or the electric line cover can be damaged. This may cause a short or fire.
3. For the installation, remove the dome using the wrench included with the camera to loosen the three (3) screws on the base of the dome. Remove the protection film between the dome and the camera module.

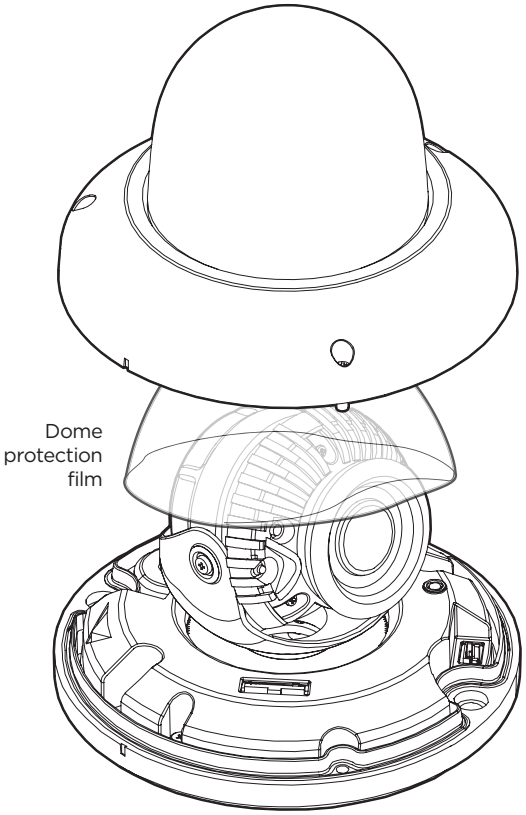

WARNING **DO NOT TOUCH THE BUBBLE.**
CleanView™ Hydrophobic Dome Coating has been applied to the dome.

4. Remove the existing moisture packet and insert the new packet in its place. The camera will generate enough heat to dry moisture during operation. In case of a moisture issue, keep the moisture absorber in the camera for up to six (6) months.

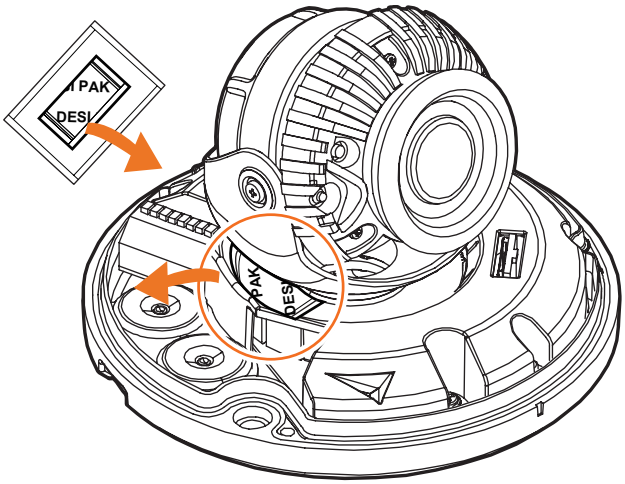

WARNING: The moisture absorber prevents moisture buildup inside the camera, which may cause image performance issues and damage the camera.

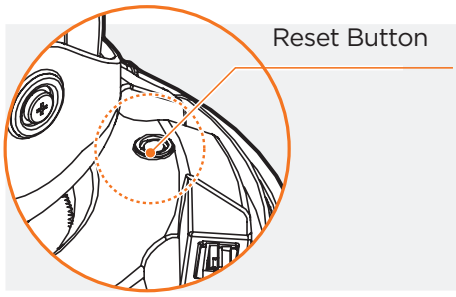

Resetting the camera:
With the camera powered ON, press the reset button for five (5) seconds to initiate a camera-wide reset of all the settings, including network settings.

Warning:
Pressing the 'Reset' button, will initiate a system-wide reset, and you will lose all settings. Use the export settings tool or take note of the camera settings as needed.

Installation -
Typical Installation

1. Using the mounting template sheet or the camera itself, mark and drill the necessary holes in the mounting surface.
2. Attach the camera to the mounting surface using the included anchors and screws.
3. Adjust the camera's tilt and angle by loosening the tilt screw at the base of the camera module. The camera's max tilting angle is 75°. Tighten the screw once the adjustment is complete.

NOTE: When setting up the camera for the first time, use the CALIBRATE button on the camera's web GUI to auto calibrate the camera's lens before operation.

4. Assemble the dome cover over the camera body. Align the dome and bottom case to match the case outline.
5. Remove the protective film from the dome. Softly wipe the dome with lens tissue or a microfiber cloth to remove any dust or smudges left from the installation process.

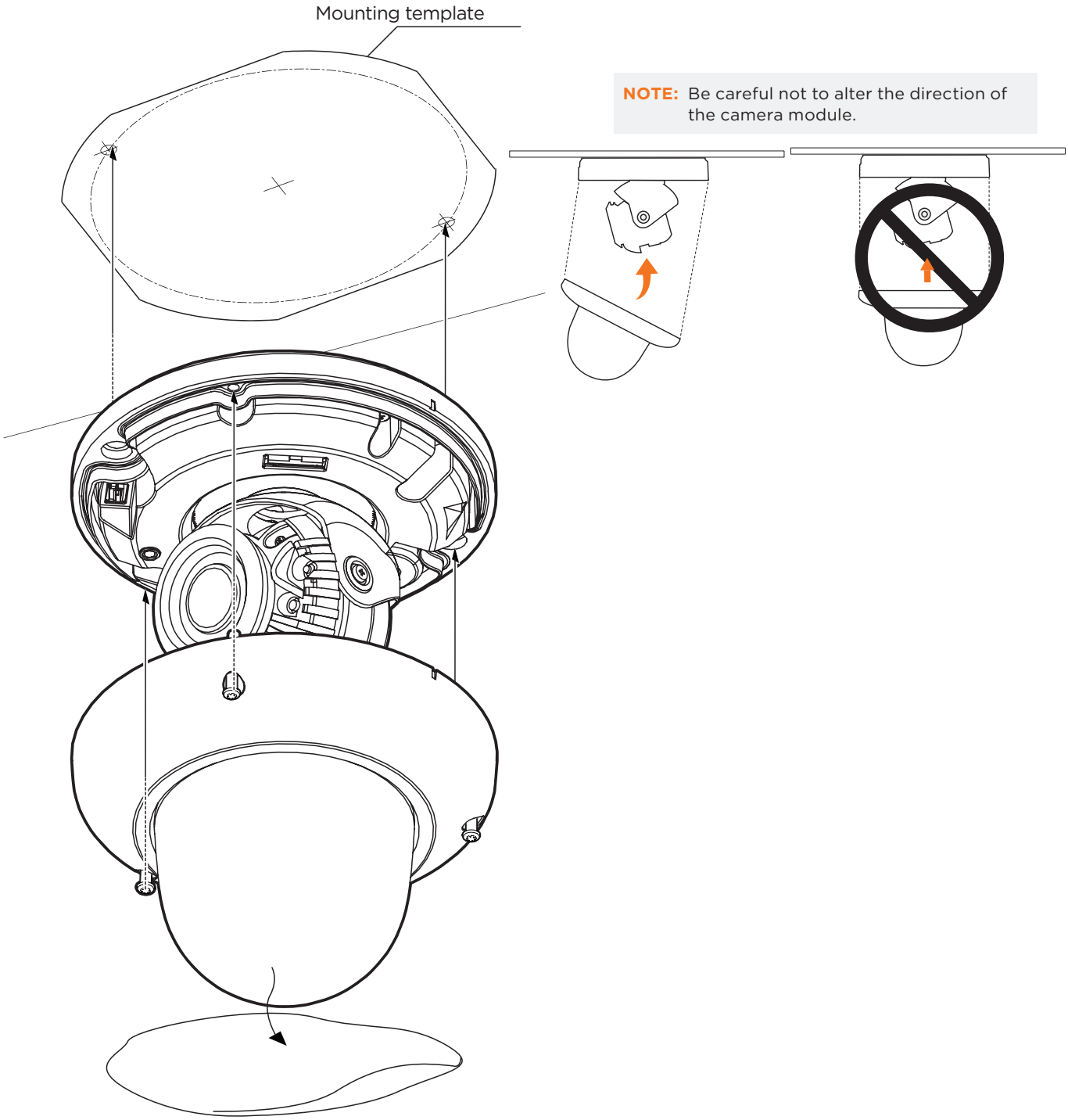

NOTE: Be careful not to alter the direction of the camera module.

Installation -
Installation Using Mounting Bolt & Nuts

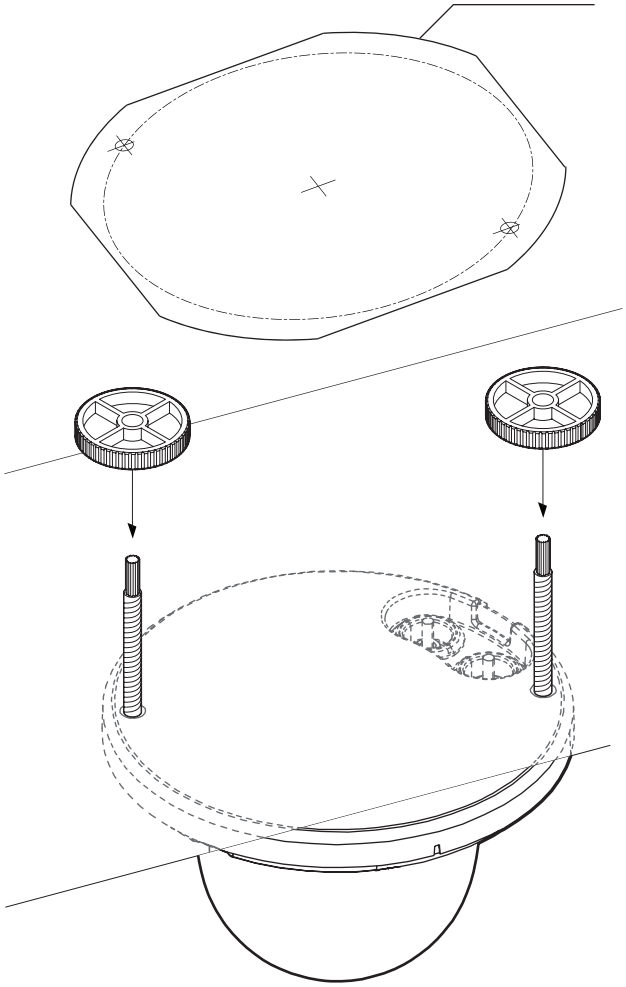

1. Mark and drill the necessary holes in the wall or ceiling using the mounting template for the nuts and bolts installation.
2. Pass the wires through and make all necessary connections.
3. Secure the two mounting screws to the camera's base.
4. Mount the camera to the mounting surface using the two mounting nuts.
5. Rotate the locking discs over the screws until the camera is held tightly from the mounting surface.
6. Adjust the camera's lens position to the necessary angle. The camera's max tilting angle is 75°.
7. Assemble the dome cover over the camera body. Be sure to assemble the dome and bottom case to match the case outline.
8. When the installation is completed, remove the protective film.

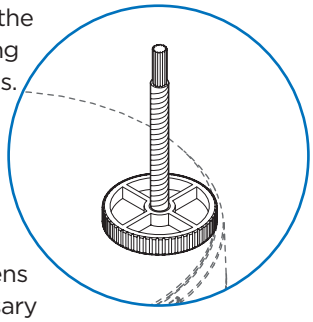

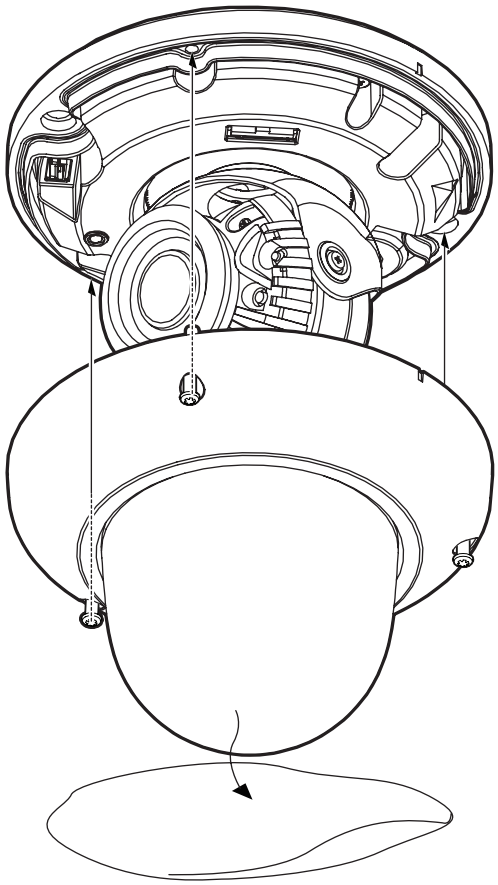

Installation -
Adjusting the Camera Angle

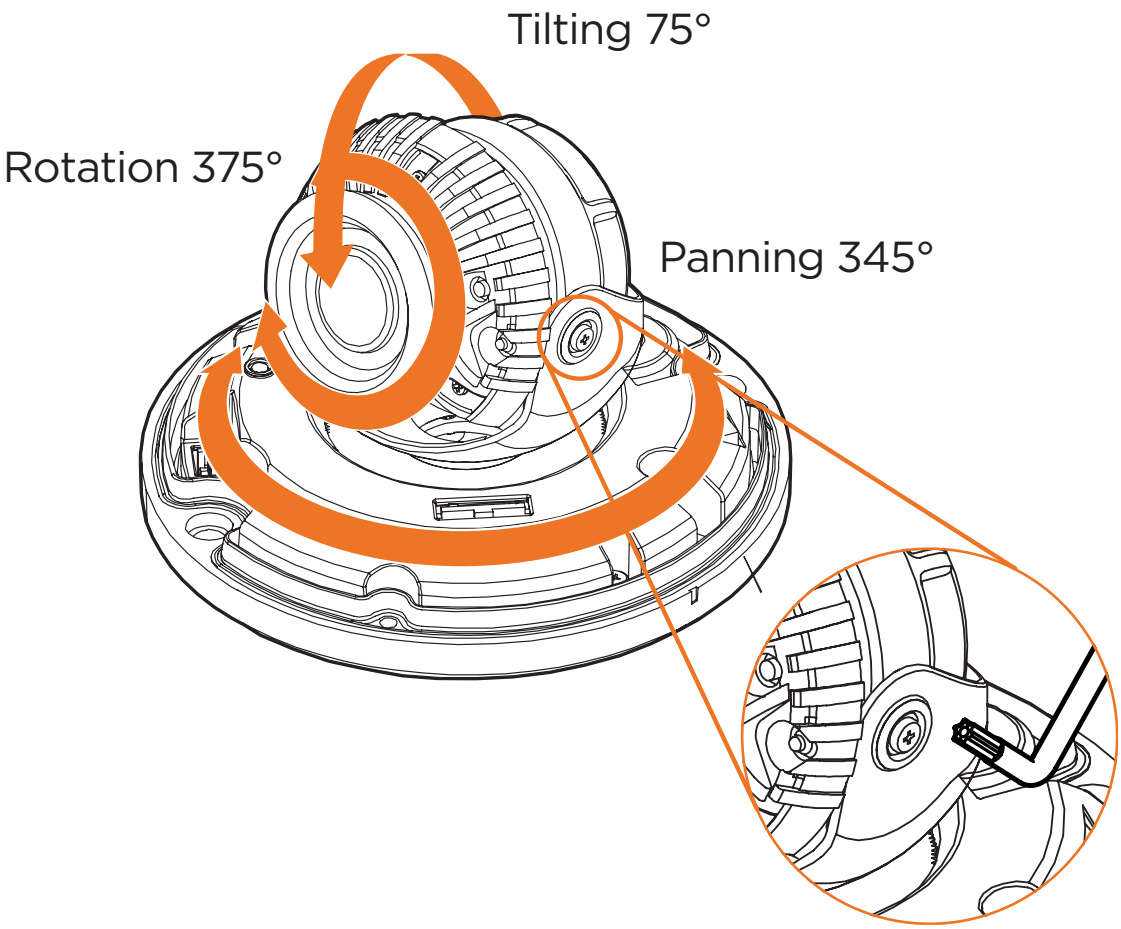

Installation - Cabling

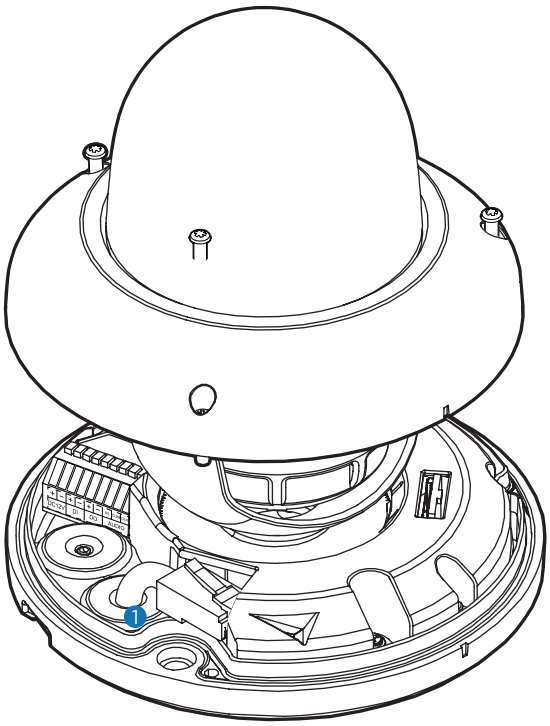

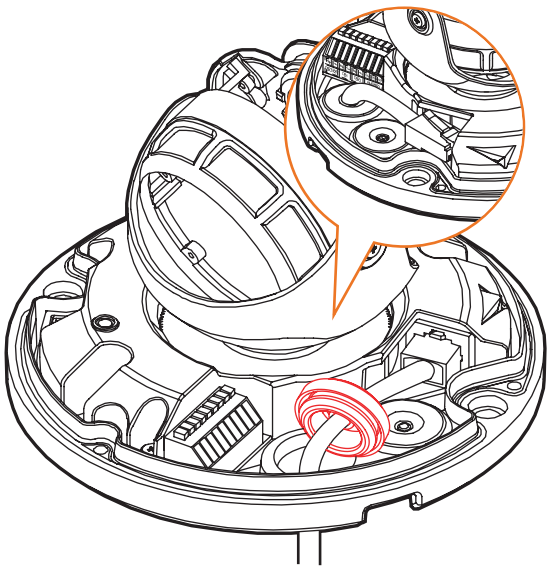

1. **Network cable** - To connect an RJ45 cable to the camera:

   Option A (Recommended):

   a. Remove the grommet plug.

   b. Pass the network cable through the grommet at the base of the camera.

   c. Once the cable is through, add the RJ45 connector.

   d. Connect the RJ45 to the camera's network input at the base of the camera.

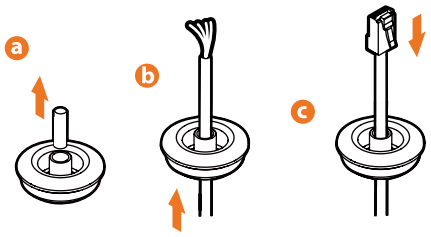

Option B:

a. Attach the included RJ45 installation tool to the network cable.

b. Remove the grommet plug.

c. Pass the network cable through the grommet. Pay attention to the direction of the grommet connection.

d. Once the cable's connector is through, remove the installation tool.

e. Once the network cable is passed through the grommet:

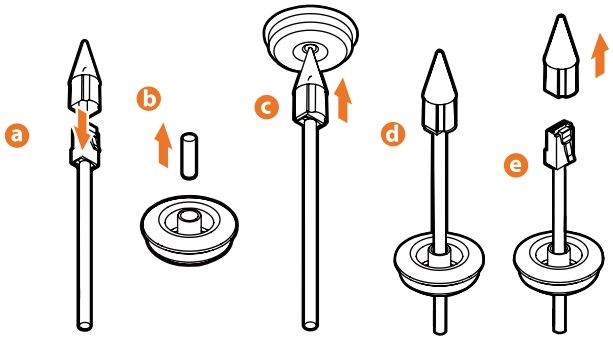

f. Insert the grommet into the bottom of the camera base.

g. Connect the RJ45 to the camera's network input at the base of the camera.

NOTE:

Use a cable with a diameter of ø0.19" ~ ø0.31" (ø5.0 ~ ø8.0mm).

Depending on the installation environment, remove the rubber plug on the side of the camera's base and use the gap as a cable guide to prevent cables from getting caught between the camera and the mounting surface.

NOTE: Bending the cable may cause water leakage.

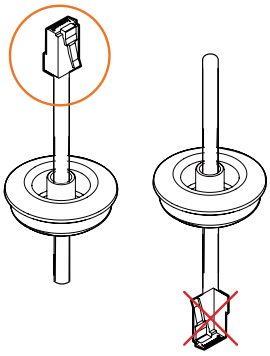

Installation - Cabling

1. **Network Connection**
   See page 11 for connection options.

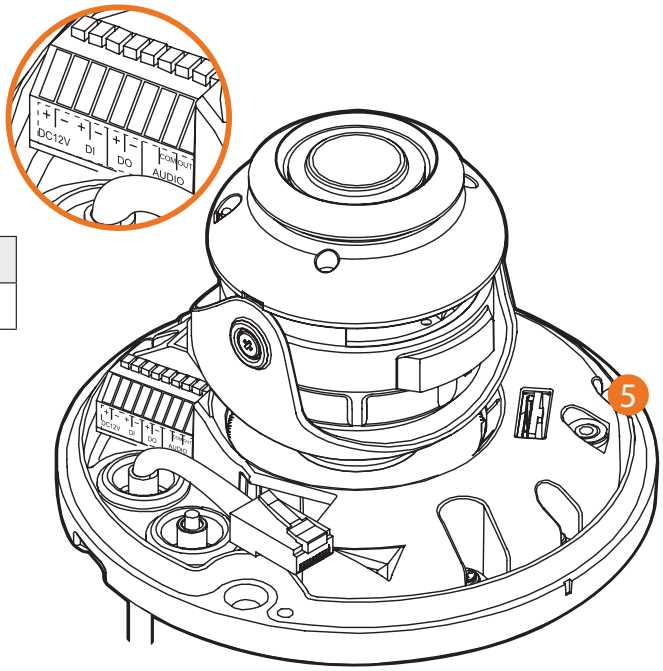

+	-	+	-	+	-		COM	OUT
DC12V		DI		DO		AUDIO		
2		3		4		6		

2. **Power**
   Please check the correct rated power.

Use a PoE Switch or PoE Injector to connect data and power to the camera using a single Ethernet cable.

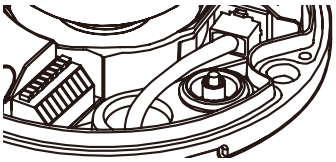

OR

Use a non-PoE Switch to connect data using an Ethernet cable and use a power adapter to power the camera.

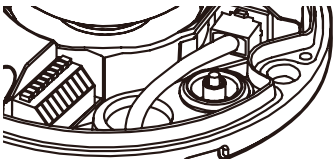

+

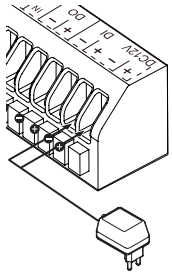

Power requirements	Power consumption
PoE, IEEE 802.3af Class 3, (Adapter not included)	DC12V: 10.2W, 850mA PoE: max 12.5W

3. **Sensor/alarm input (DI)**
   The sensor/alarm input device's cable should connect to the + and - of the Terminal Block.
4. **Alarm out/relay out (DO)**
   Connects to the alarm lights, siren or lamps and the sensor types are normal open and normal close.
5. **Audio in**
   The camera has a built-in microphone, controlled from the camera's web viewer.
6. **Audio out**
   Connect the 'audio out' port of the camera to the 'line in' port of the speaker.
   If a speaker is connected to the audio output without an amplifier, it will not work properly. A speaker with an aplifier or a separate amplifier is needed.
7. **SD card slot**
   See the next page.

Installation -
Inserting/Removing an SD Card

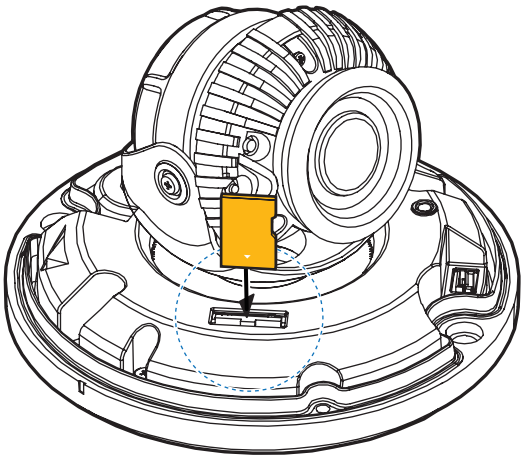

The memory card is an external data storage device that has been developed to offer an entirely new way to record and share video, audio, and text data using digital devices.

Recommended SD card specification (not included)

- Type: Micro SD (SD/SDHC/SDXC)
- Capacity: Up to 1 TB / FAT32 format.
- Class: UHS-I U3 Class 10

New micro SD card over 64GB must be formatted on the first use.

File System Options

- exFAT: Recommended for better file stability and compatibility with large files.
- FAT/vFAT: Another option available, but it may offer lower file stability compared to exFAT.
- Note: Using exFAT is recommended to maintain file reliability and integrity.

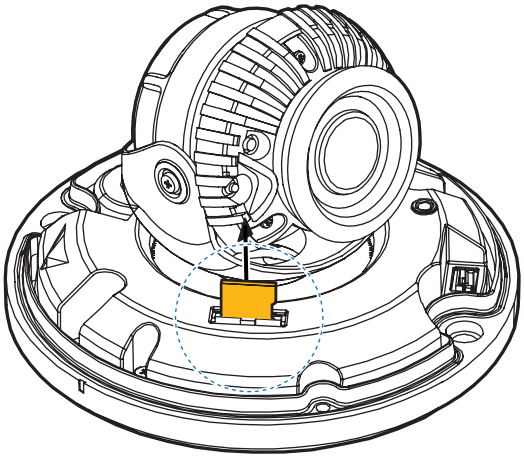

1. Locate the SD card slot at the base of the camera.
2. Insert a class 10 SD card into the slot until it clicks into position.
3. Press the card inward to release it from the card slot.

NOTE: Maximum SD Card size supported: Up to 1TB micro SD / FAT32.
When inserting the SD card into the card slot, the SD card's contacts should be facing upward, as shown in the diagram.

Network Set up - DW IP Finder™

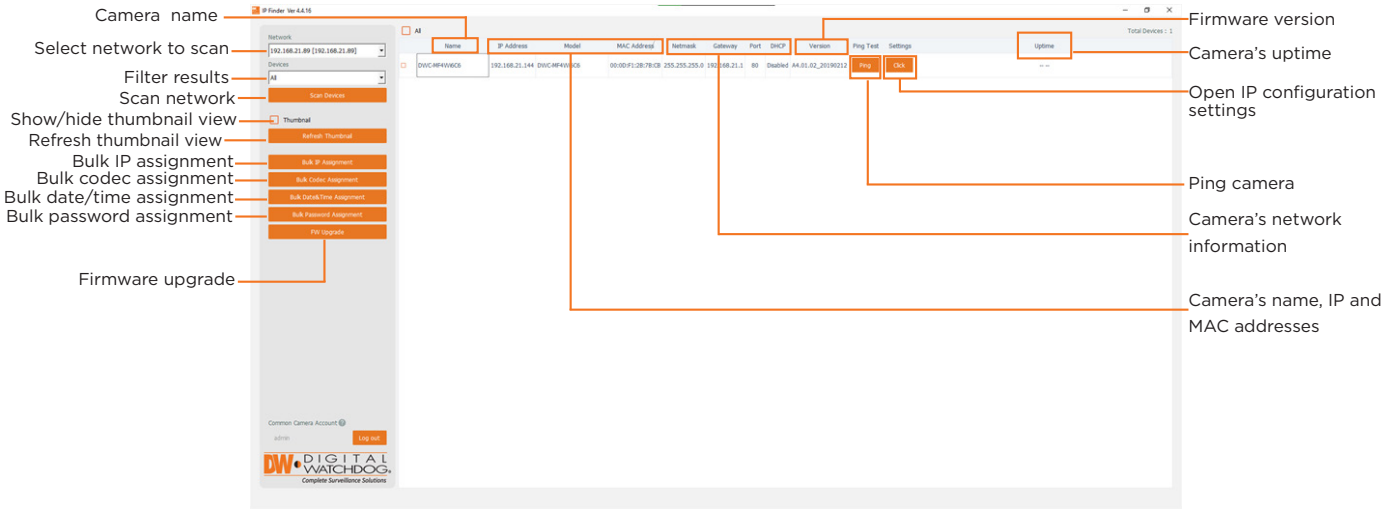

1. To install the DW IP Finder, go to: http://www.digital-watchdog.com
2. Enter "DW IP Finder" on the search box at the top of the page.
3. Go to the "Software" tab on the DW IP Finder page to download the installation file.
4. Follow the installation to install the DW IP Finder. Open the DW IP Finder and click 'Scan Devices.' It will scan the selected network for all supported devices
   and list the results in the table. During the scan, the DW® logo will turn gray.
5. A password must be set when connecting to the camera for the first time. To set up a password for your camera:
   a. Check the box in the IP Finder's search results next to the camera. You can select multiple cameras.
   b. Click "Bulk Password Assign" on the left.
   c. Enter admin/admin for the current username and password. Enter a new username and password to the right.

      Passwords must have a minimum of 8 characters with at least 4 combinations of uppercase letters, lowercase letters, numbers and special characters. Passwords cannot contain the user ID.
   d. Click "change" to apply all changes.
6. Select a camera from the list by double-clicking on the camera's image or clicking on the 'Click' button under the IP Conf. column. The pop-up window will show the camera's current network settings, allowing admin users to adjust the settings as needed.
7. To access the camera's web page, click on the 'View Camera Website' from the IP Config window.
8. To save changes made to the camera's setting, enter the username and password of the camera's admin account and click 'Apply'.

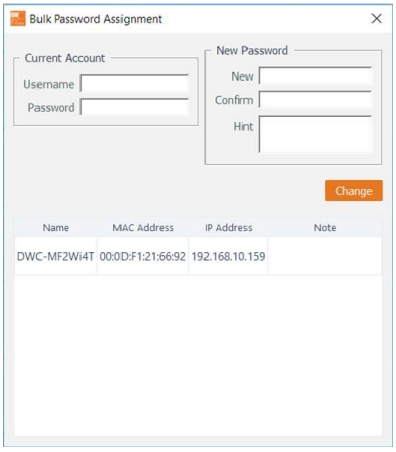

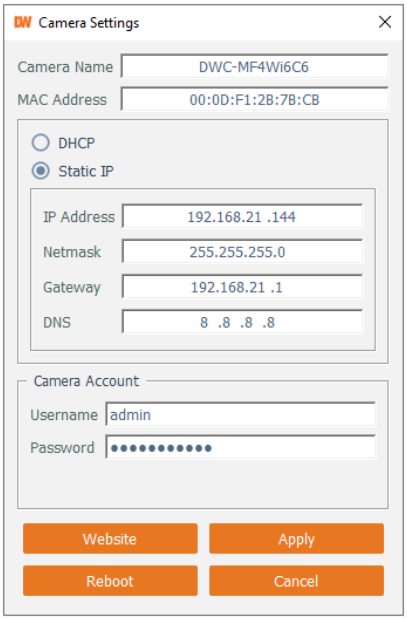

- Select 'DHCP' for the server to assign the camera's camera settings automatically.
- Select 'Static' to manually enter the camera's network information.
- The camera's IP must be set to static if connecting to Spectrum® IPVMS.
- Contact your network administrator for more information.

- To access the camera from an external network, port forwarding must be set in your network's router.

Web Viewer Screen -
Basic Screen (Default)

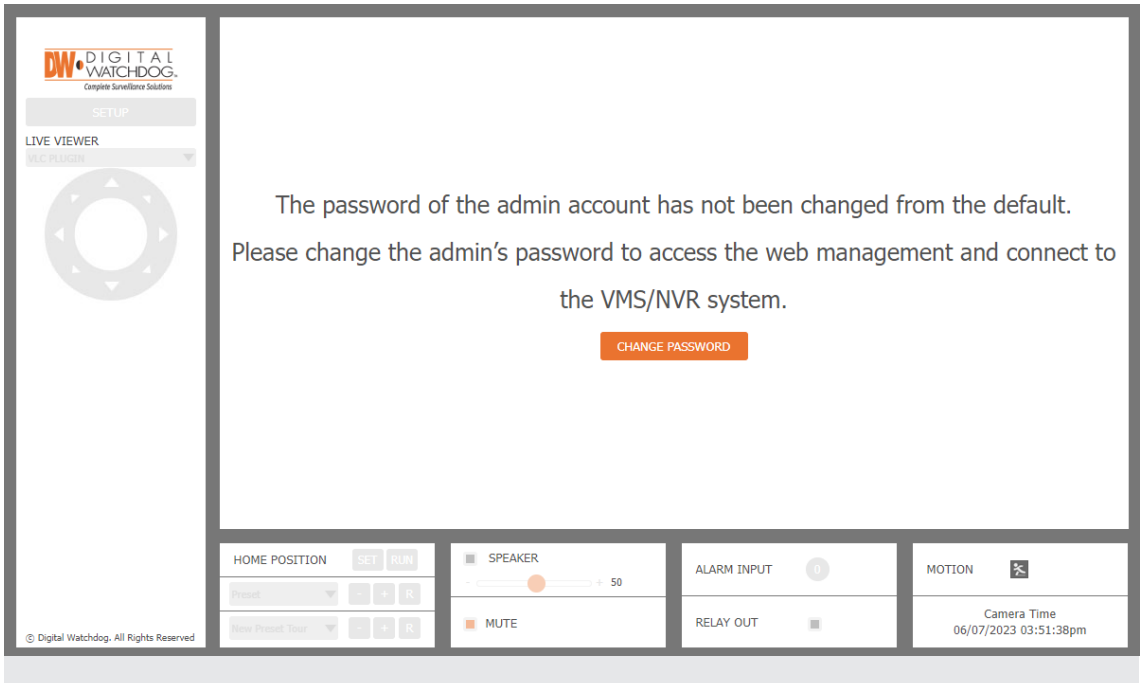

Password change is required at the initial connection or after a factory reset.

❶ You can not see the image, and the Set up button is disabled.

❷ Change the password with the CHANGE PASSWORD button.

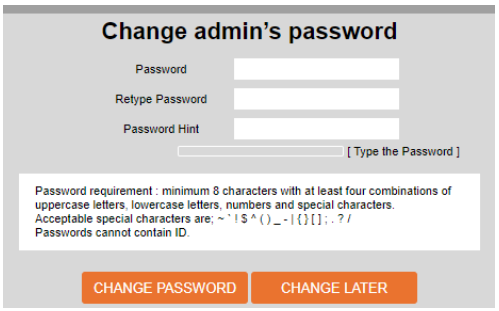

❸ After changing the password, you must log in again by pressing the RE-LOGIN button.
Web index In the state of the page, when the web page does not have a mouse click or keyboard input event, the web session will close and automatically switch to the logout page. (You must log in again with the RE-LOGIN button.)

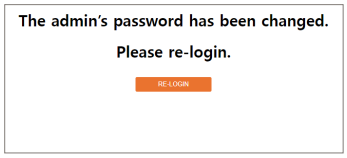

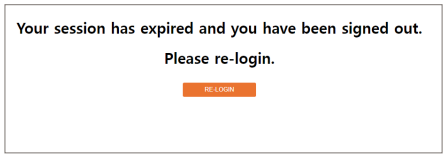

Web Viewer Screen - Basic Screen

Web Viewer is optimized for Microsoft Edge and Google Chrome.

1 **Live video display** - This is the region for live video streaming from the camera.

2 **Set up popup button** - Open the setup page to set up details of the IP camera like Video, Network, Events, System etc. See the section 'Setup.'

3 **Live Buffering -** Live video can be turned on and off. You can get a faster response when turning off the live video than the network band's camera setting.

4 **Arrow buttons** - Using the Pan and Tilt of the camera, can move in 8 directions.
※ This function is only supported by PTZ cameras.

5 **Focus** - Adjust the camera's focus automatically based on the current view and conditions.

6 **Calibrate** - For cameras with a motorized zoom lens, use the calibration button to set the camera's lens settings to the current view and conditions.

7 **Zoom/Focus buttons** - The camera's zoom can be controlled using the six buttons, with three levels of movement. These allow users to adjust the camera's view for wide, tele, near and far movements. Clicking the buttons (<<< >>>) move the lens more extensively than the buttons (< >).

8 **Auto Focus** - When enabled, the camera will adjust its focus according to the current view and conditions after each zoom adjustment.

9 **MFZ lock/unlock** - Lock the focus and zoom settings.

10 **PTZ function -** This dashboard allows users to control and activate the camera's home position or run any set presets, tours or actions on supporting cameras.
※ This function is supported on PTZ cameras only.

Web Viewer Screen -
Basic Screen

⓫ **Audio function -** Adjust the camera's audio settings. Users can enable or disable audio from the camera, adjust the volume, and enable or disable audio from the monitoring PC to the camera.
※ This function is available on cameras with audio input and output support.

⓬ **Alarm input** - When an alarm is triggered, the (0) notification will show the alarm is active. This is available on cameras that support relay output.

⓭ **Relay out** - Enable or disable the relay output in the camera. This is available on cameras that support relay output.

⓮ **Motion** - When motion is detected in the camera, the motion icon will turn orange.

⓯ **Camera Time** - Shows the date and time established in the camera's settings.
※ Check the Set up > System > Date & Time Setting to display the time.

Set up - Video & Audio Set up
Video Configuration

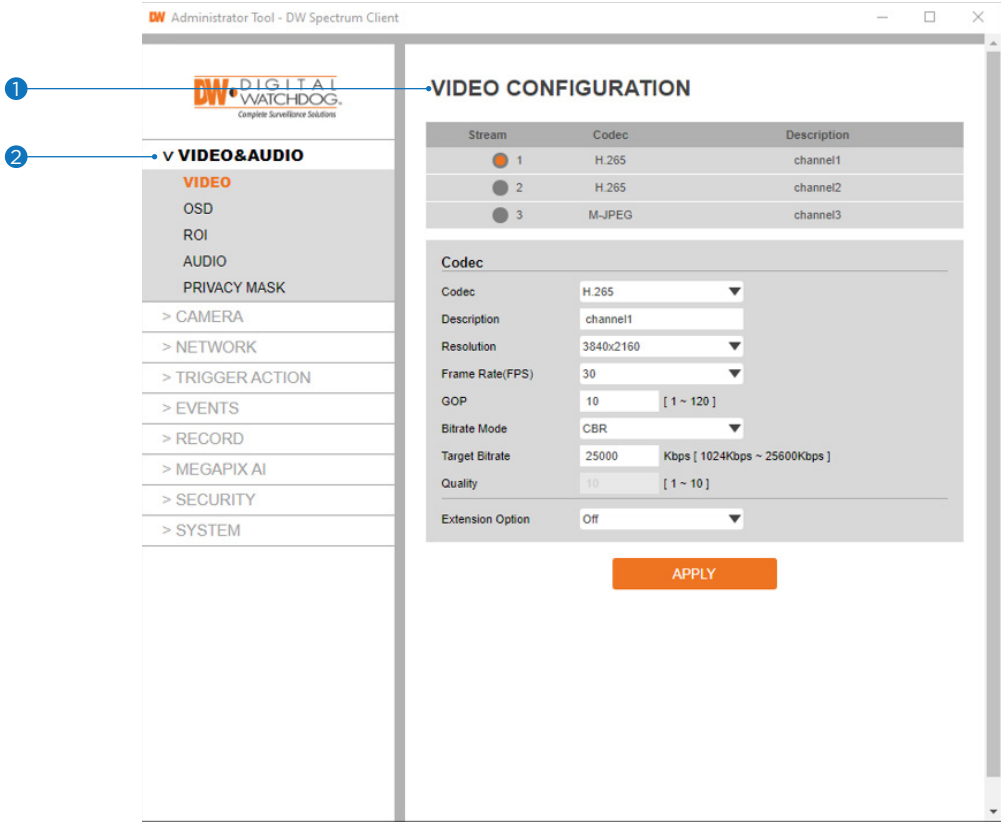

❶ **Detail Page -** When you select an item from the menu, you can set the details for the selected item.

❷ **Set up Constitution**

Video and Audio
[VIDEO, OSD, ROI, AUDIO, PRIVACY MASK]
Camera
[IMAGE ADJUSTMENT, EXPOSURE, DAY&NIGHT, BACKLIGHT, WHITE BALANCE, IMAGE, VIDEO]
Network
[STATUS, NETWORK SETTING, AUTO IP, ONVIF, UPNP, DDNS, FTP, SMTP, SNMP, HTTP ACTION, RTSP INFORMATION]
Trigger Action
[ACTION RULES, IMAGE TRANSFER, RELAY OUT]
Events
[EVENT RULES, MOTION, TEMPERATURE, ALARM INPUT]
Record
[MANAGEMENT, RECORD FILES, STORAGE]
MEGApix Ai
[RULES, COUNTERS, BURNT-IN ANNOTATION, TCP NOTIFICATION, HTTP NOTIFICATION, TAMPER, ADVANCED, LICENSE]
Security
[IP ADDRESS FILTER, RTSP AUTHENTICATION, IEEE 802.1x, HTTPS, CERTIFICATES, AUTO LOCK]
System
[INFORMATION, DIAGNOSTICS, CONFIGURATION BACKUP, FIRMWARE UPDATE, DATE&TIME, DST, USER MANAGEMENT, LOG, FACTORY RESET, RESTART, OPEN SOURCE, PLUG-IN]

Set up - Video & Audio Set up
Video Configuration

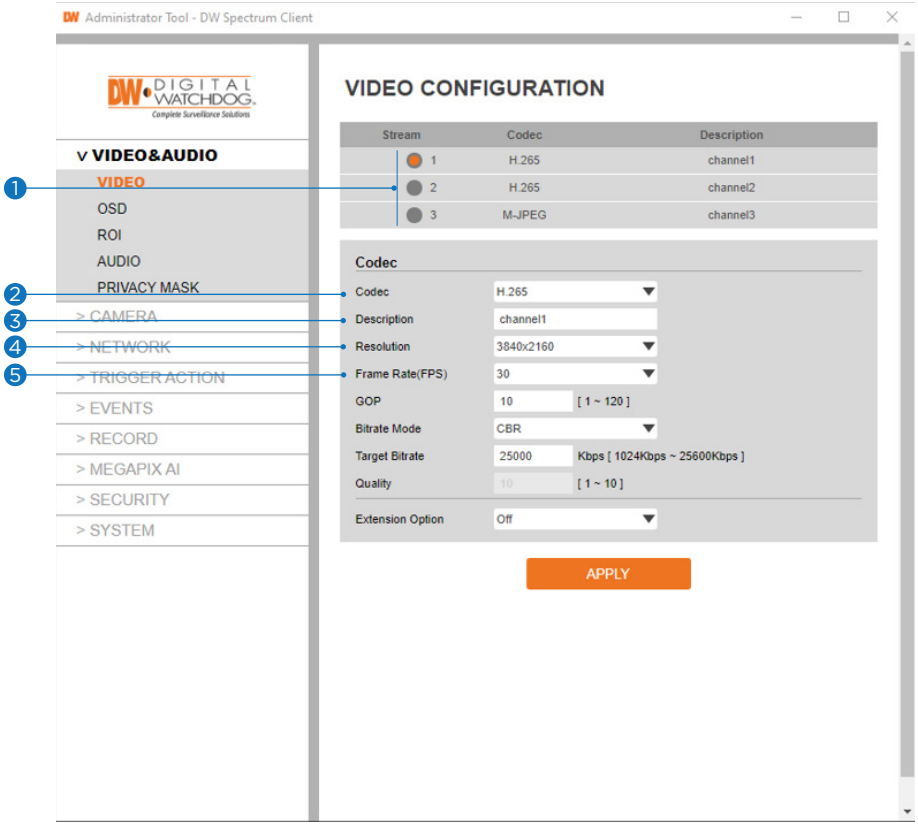

❶ **Live Video Channel Set up -** The video can be configured to various settings with a combination of codec and resolution. The camera performance should be considered when setting multiple channels, as the camera's performance will be affected.
※ H.265 (HEVC) codec with a higher bitrate may cause unstable live streaming or reload the webpage.

❷ **Codec -** Choose the video codec. Depending on the selected codec, the subcategories may be changed accordingly.

❸ **Description -** Input the additional description of the selected channel. Max. 30 alphanumeric characters may be used, including spaces.

❹ **Resolution -** Select video resolution.
※ Available Frame Rate may differ even if the same codecs are in use.

4K Cameras	
1st stream	3840x2160, 2592x1944, 2560x1440, 1920x1080
2nd stream	800x600, 704x576, 704x480, 640x480, 640x360, 352x288, 352x240
3rd stream	1920x1080, 1280x720, 800x600, 768x432, 704x576, 704x480, 640x480, 640x360, 352x288, 352x240
5MP Cameras	
1st stream	2592x1944, 2560x1440, 1920x1080
2nd stream	800x600, 704x576, 704x480, 640x480, 640x360, 352x288, 352x240
3rd stream	1920x1080, 1280x720, 800x600, 768x432, 704x576, 704x480, 640x480, 640x360, 352x288, 352x240

❺ **Frame Rate -** Select the maximum Frame Rate.
※ Available Frame Rate can be different, although the same codecs were set up.

Set up - Video & Audio Set up
Video Configuration

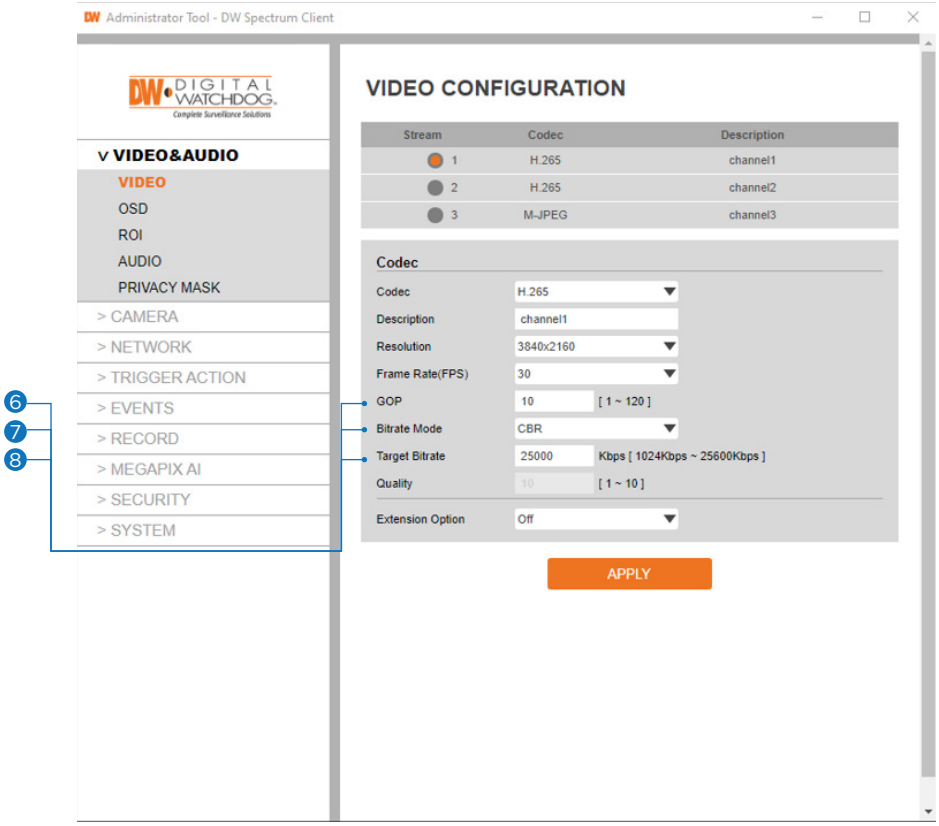

6 **GOP (Group of Pictures) Size -** Set up the number of frames (P-frame) that contain only changed information based on the basic frame (I-frame). Regarding videos with lots of movement, if you set the GOP size bigger, only the number of P-frames is bigger.
As a result, the video resolution will be low, but 'File size' and 'Bitrate can be decreased.

※ **GOP (Group of Pictures) Size -**
I-frame and P-frame creation for MPEG4, H.264, and H.265 (HEVC) video compression. 'I-frame,' also known as 'key-frame,' refers to the complete image data for a specific video frame. 'P-frame' refers to the changes in the image compared to the previous video frame. As a result, the GOP consists of one I-frame and several P-frames. For improved video quality, use a lower number of P-frames for this setting.

7 **Profile -** The profile defines the subset of bitstream features in H.264, H.265 (HEVC) stream, including color reproduction and additional video compression.
※ H.264: Main, High / H.265 (HEVC): Main
Main - An intermediate profile with a medium compression ratio. Supports I-frames, P-frames, and B-frames.
High - A complex profile with a high compression ratio. Supports I-frames, P-frames, and B-frames.

8 **Bitrate Mode -** Select the bitrate control scheme of video compression from CBR (Constant Bitrate) or VBR (Variable Bitrate).
CBR - To guarantee the designated constant bit rate, the video quality is controlled in this mode. Therefore, the video quality will likely vary when network traffic changes.
VBR - To guarantee the designated quality, the bit rate of the video stream is changed in this mode. Therefore, the video's frame rate will likely vary when network traffic changes.
※ This category will not appear if you select the MJPEG codec.

Set up - Video & Audio Set up
Video Configuration

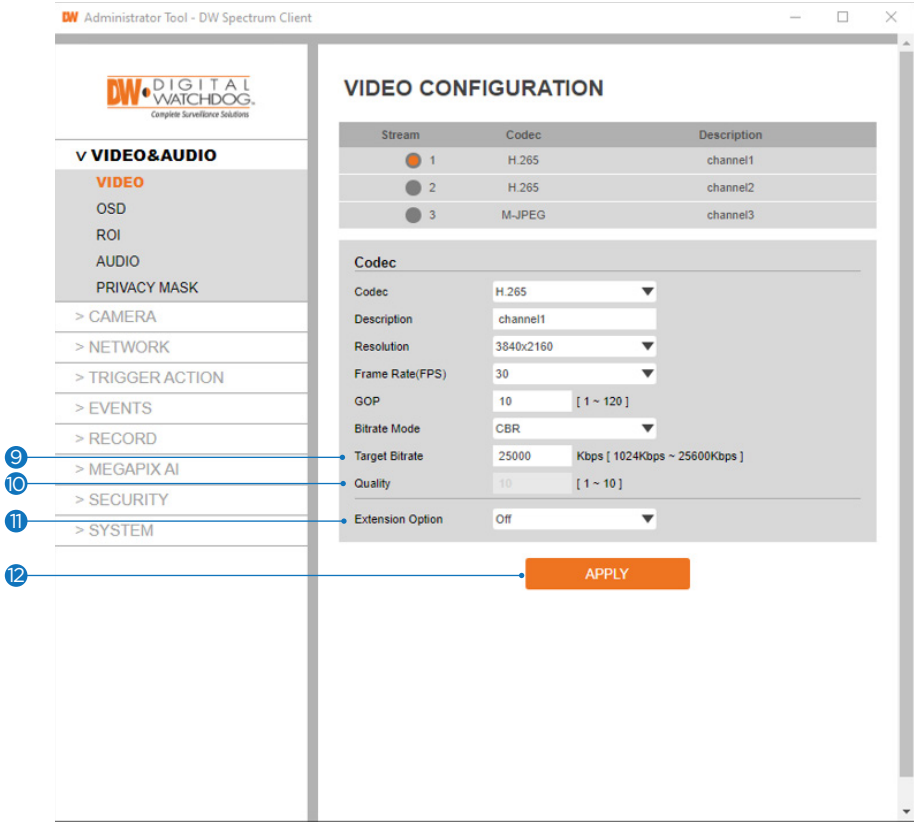

9 **Target Bitrate -** If Bitrate Control is set to CBR, you can set the Target Bitrate.

10 **Quality -** For VBR control mode, The Target Quality of the video can be set up.

11 **Extension Option**

Off - You cannot use the Extension Option.

SVC-T On - The H.264, H.265 (HEVC) SVC (Scalable Video Coding) is a video compression algorithm that enables effective and efficient transmission of video files over low bandwidth networks.

12 Click 'Apply' to save all settings.

Set up - Video & Audio Set up
OSD Configuration

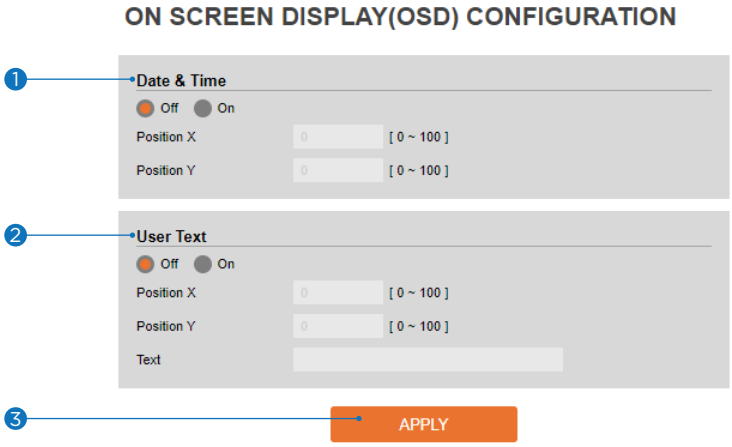

1 **Date / Time -** Display the current time.

2 **User Text -** Output the TEXT entered by the user. Support a maximum of 30 characters.

3 Click 'Apply' to save all settings.

Set up - Video & Audio Set up
Region of Interest Configuration

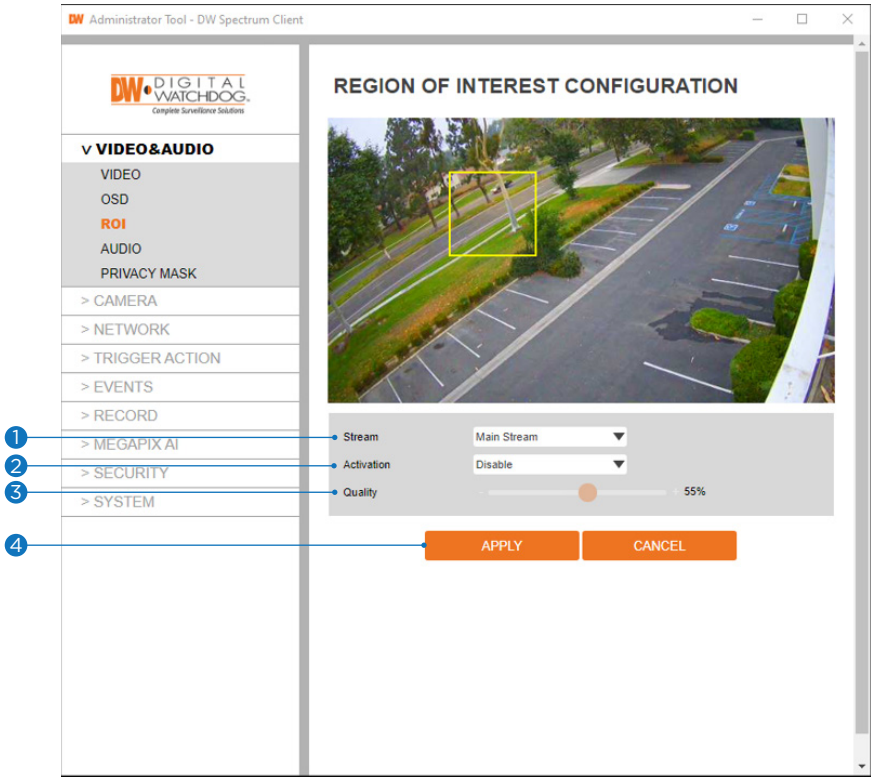

The region of interest function gives the indicated area a more efficient picture quality to improve movement in the scene without compromising the bandwidth.

1 **Stream -** Select the Stream.
- Currently supports only H.264, H.265 (HEVC).
- The function is not supported in the MJPEG codec.

2 **Activation -** Enable or disable the region of interest function.

3 **Quality -** Set the quality of the set area.

4 Click 'Apply' to save all settings.
- Click 'Cancel' to return to the previous setting.

Audio Configuration (Audio Input)

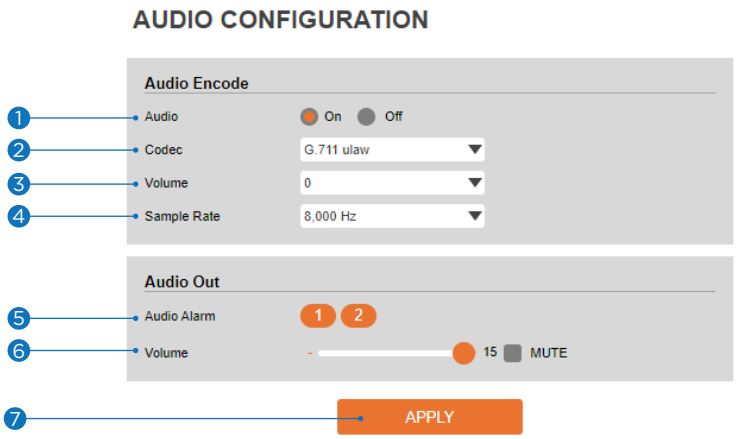

1 **Audio -** Select to turn the audio input on or off from the camera.

2 **Source** - Select the audio input source. If your camera has a built-in microphone or speaker, those will be selected by default. Use the menu options to change to a wired audio input or output if your camera supports one.

- Currently, the camera supports codec G.711.

3 **Volume -** Select the audio input volume from 0 to 10.

4 **Sample Rate -** Select the audio input sample rate.

- Currently, the camera supports 16,000 Hz.

5 **Audio out > Audio Alarm -** Select the audio output from the two available alarm options.

6 **Audui out > Volume -** Select the audio output volume from 0 to 10.

7 Click 'Apply' to save all changes.

Set up - Video & Audio Set up
Privacy Mask Configuration

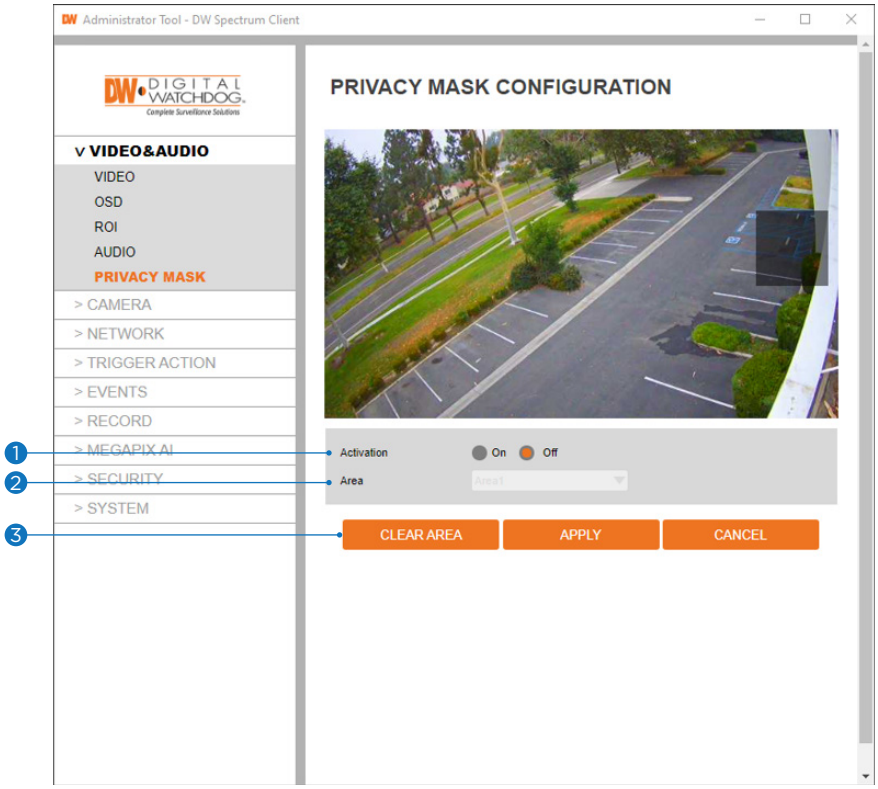

Use this function to mask areas you want to hide on-screen to protect privacy.

1 **Activation -** Enable or disable the privacy mask function.

2 **Area -** Select Area1 ~ Area16, then draw the privacy mask in the video display.

3 Click 'Apply' to save all settings.
- Click 'Cancel' to return to the previous setting.
- Click 'Clear Area' to delete the selected Area1~Area16.

Set up - Camera Set up
Image Adjustment

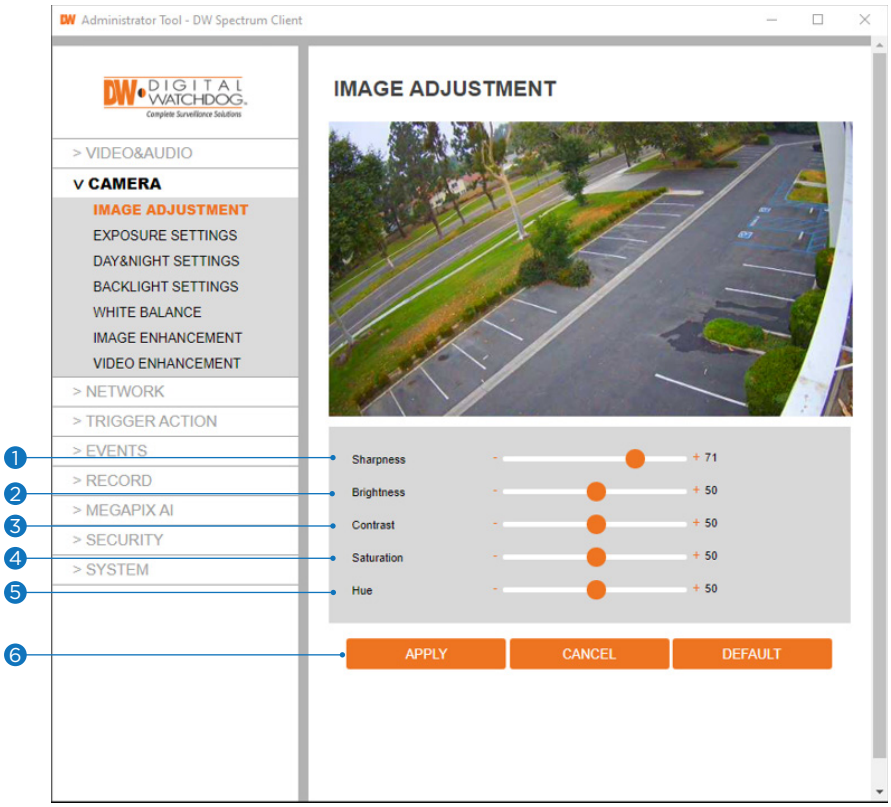

1 **Sharpness -** The higher the number, the sharper the lines in the image will appear.

2 **Brightness -** The higher the number, the brighter the image will appear.

3 **Contrast -** The higher the number, the stronger the contrast between colors in the image will appear.

4 **Saturation -** The higher the number, the more saturated the colors in the image will appear.

5 **Hue -** The higher the number, the stronger the hue in the image will appear.

6 Click 'Apply' to save all settings.
- Click 'Cancel' to return to the previous setting.
- Click 'Default' to settings to the factory defaults.

Set up - Camera Set up
Exposure Settings

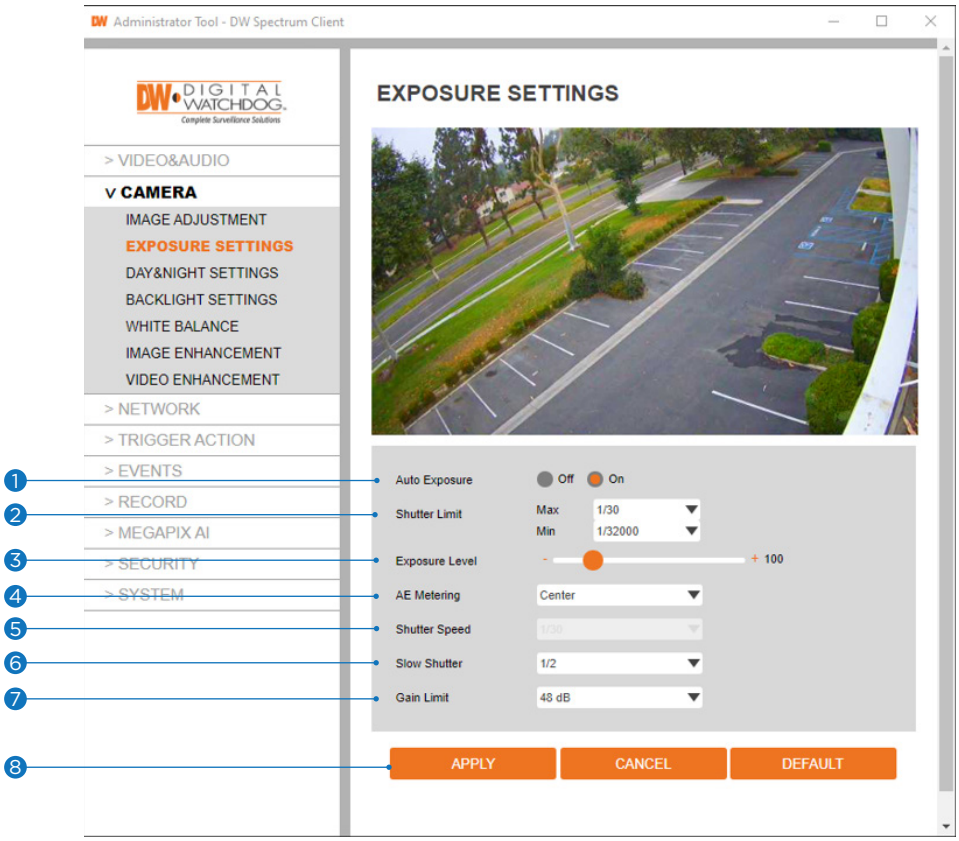

1 **Auto Exposure -** Automatic exposure (AE) automatically sets the aperture or shutter speed based on the external lighting conditions for the photo.

2 **Shutter Limit -** The higher the value, the brighter the image becomes.

3 **Exposure Level -** The higher the number, the brighter the image becomes.

4 **AE metering -** AE metering mode refers to how a camera determines the exposure.

5 **Shutter Speed -** If this speed is faster, the moving object can be photographed without the ghost effect. However, the picture can be dark if the lighting is insufficient.

6 **Slow Shutter -** Slow shutter lets you adjust the amount of light striking the sensor and determines when the video sensor sends out its batch of data for processing.

7 **Gain Limit -** Adjusts image gain. The lower the value, the darker the image will appear.

8 Click 'Apply' to save all settings.
- Click 'Cancel' to return to the previous setting.
- Click 'Default' to settings to the factory defaults.

Set up - Camera Set up
Day & Night Settings

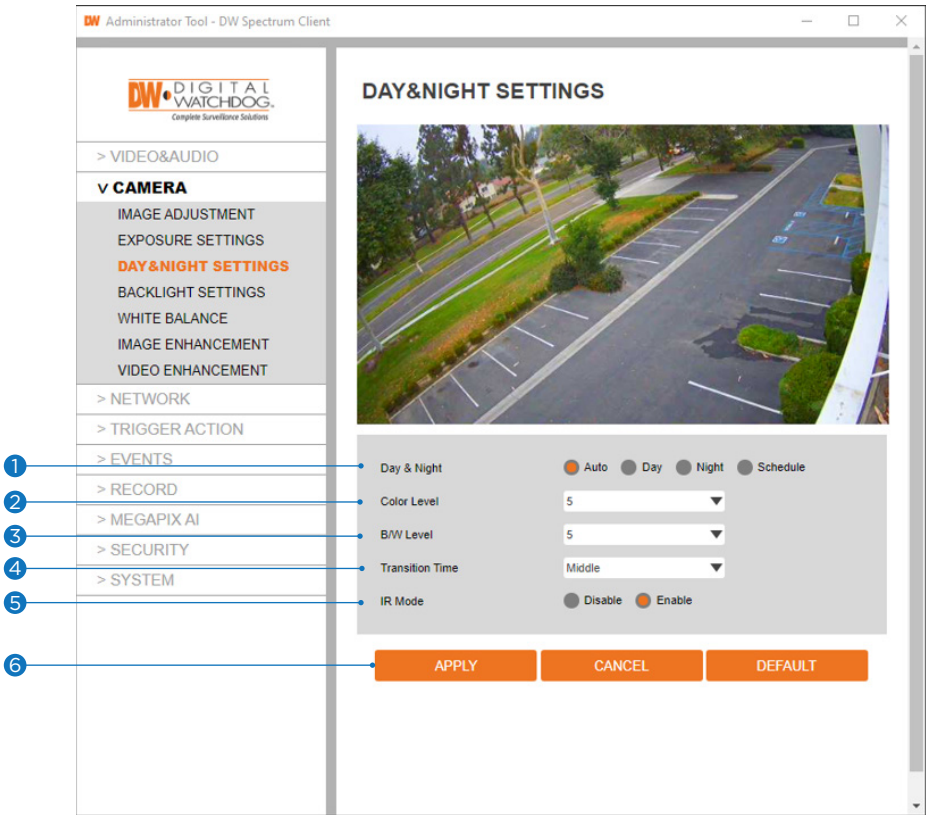

❶ **Day and Night**

- **Auto:** In this mode, the IR cut filter is automatically removed depending on the light condition.
- **Day:** In this mode, the IR cut filter is always applied to the image sensor. The sensitivity is reduced in dark light, but better color reproduction performance is obtained.
- **Night:** In this mode, the IR cut filter on the image sensor is removed all the time. The sensitivity is enhanced in the dark light condition, but the image is black and white.
- **Schedule:** In this mode, Day/Night mode is converted accordance with the scheduled time.

❷ **Color Level -** This level determines when the camera will change from Night mode (B/W) to Day mode (color) while set to Auto. The lower the value is, the lower the lighting threshold requirement is for the transition.

❸ **B/W Level -** This level determines when the camera will change from Day mode (color) to Night mode (B/W) while set to Auto. The lower the value is, the lower the lighting threshold requirement is for the transition.

❹ **Transition Time -** If the day/night switch is set to Auto, determine the rate at which Day/Night is converted.

If it is set to schedule mode, Set the time that Day/Night is converted.

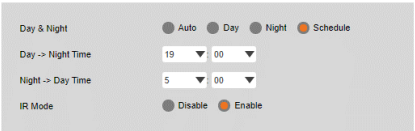

❻ **IR Mode -** turn the built-in IR LEDs on or off manually.

❼ Click 'Apply' to save all settings.

- Click 'Cancel' to return to the previous setting.
- Click 'Default' to settings to the factory defaults.

Set up - Camera Set up
Backlight Settings

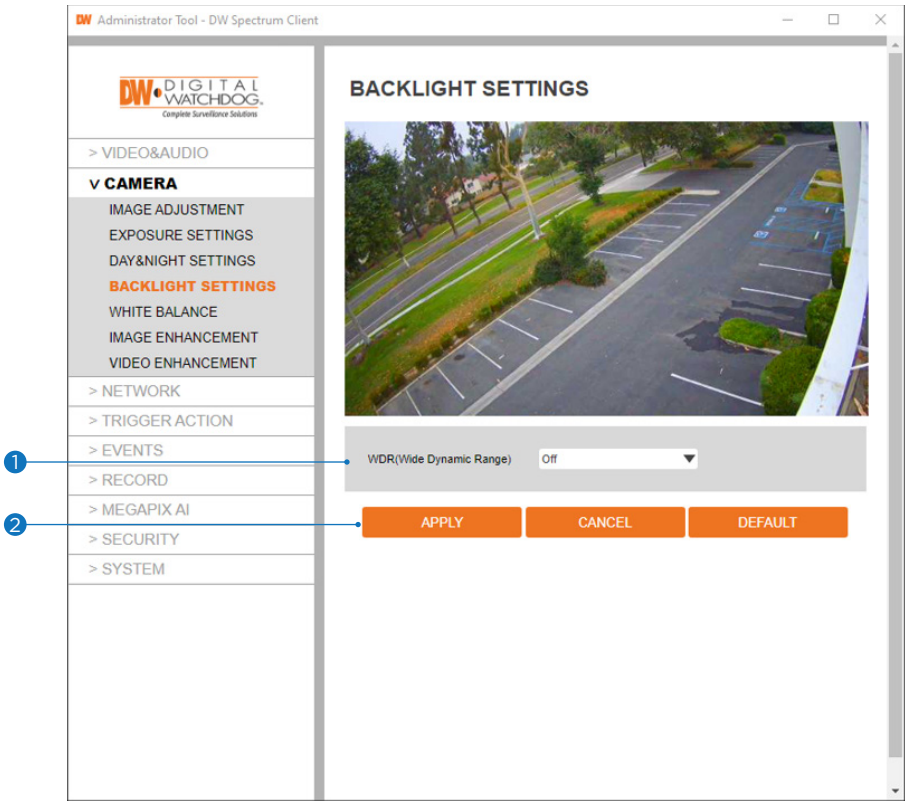

This feature is used when lighting conditions may cause detail loss in the camera's view due to high contrast.

1 **WDR (Wide Dynamic Range) -** Enable or disable the feature.

2 Click 'Apply' to save all changes.
- Click 'Cancel' to return to the previous setting.
- Click 'Default' to change the settings back to their factory defaults.

Set up - Camera Set up
White Balance

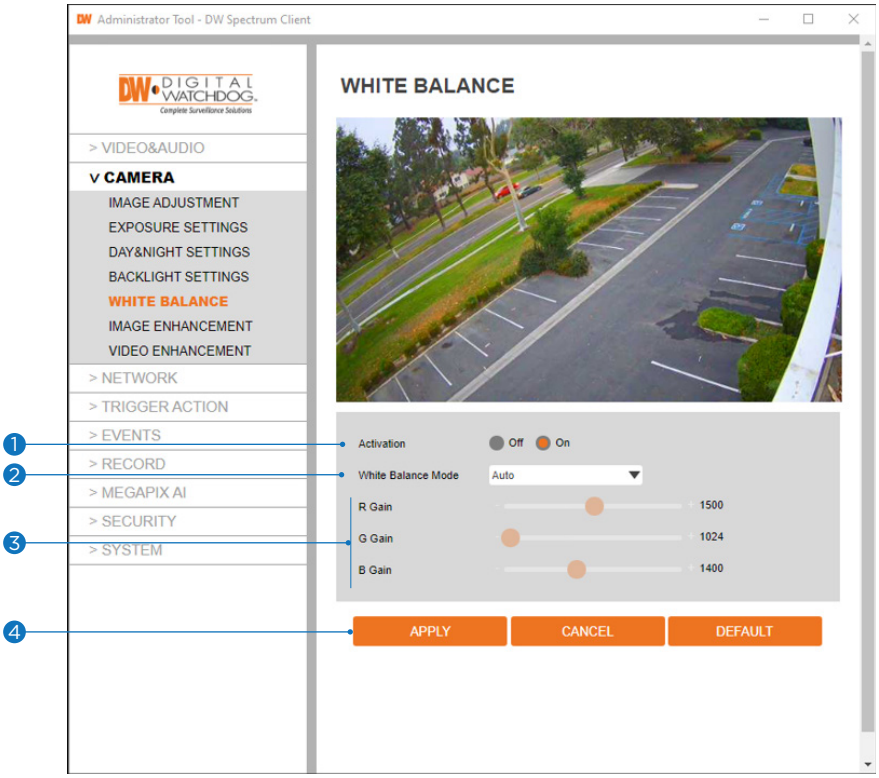

❶ **Activation -** Enable or disable the White Balance function

❷ **White Balance Mode -** Select White Balance depending on the lighting conditions.

❸ **RGB Gain -** The R/G/B gain can be set only when the White Balance Mode is set to Manual.

❹ Click 'Apply' to save all settings.
- Click 'Cancel' to return to the previous setting.
- Click 'Default' to settings to the factory defaults.

Set up - Camera Set up
Image Enhancement

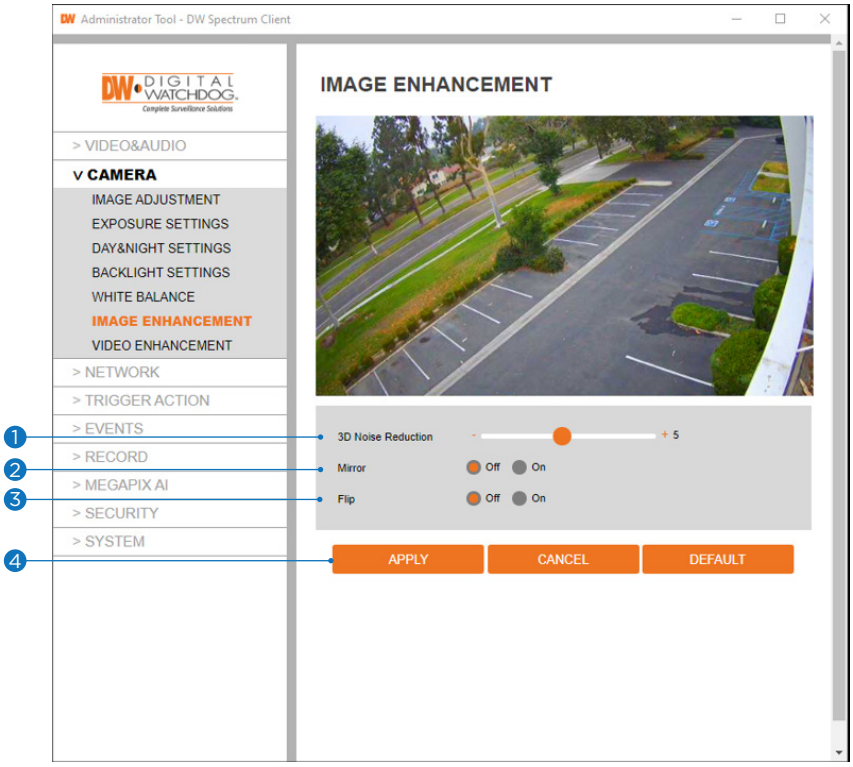

1 **3D Noise Reduction -** Reduce digital noise in low-light conditions, improving video quality.

2 **Mirror -** Reverse the video horizontally.

3 **Flip -** Reverse the video vertically.

4 Click 'Apply' to save all settings.
- Click 'Cancel' to return to the previous setting.
- Click 'Default' to settings to the factory defaults.

Set up - Camera Set up
Video Enhancement

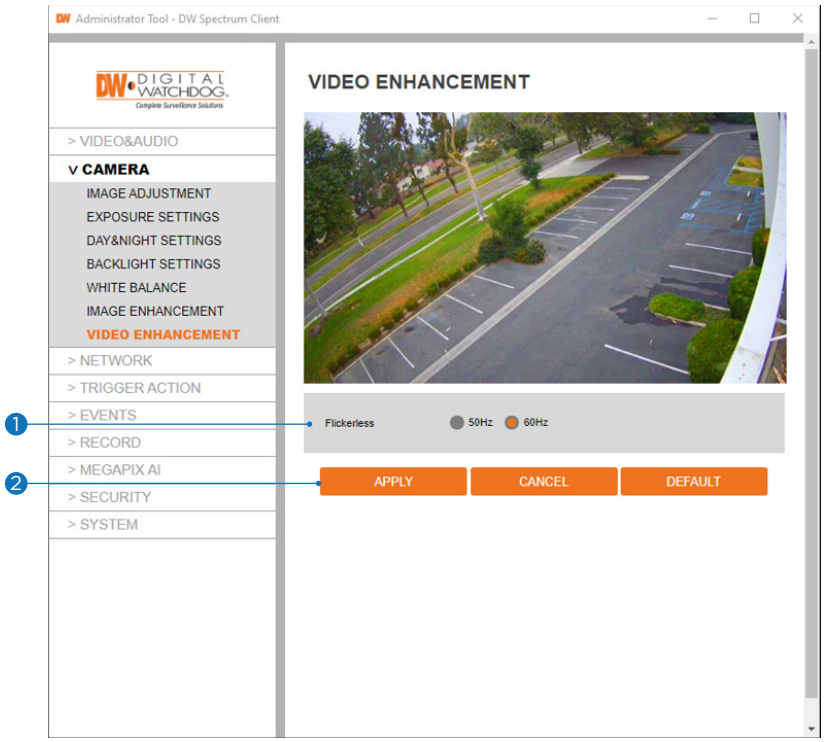

1 **Flickerless -** In environmental situations where the camera's image appears to flicker, change the Hz values to improve the camera's image.

2 Click 'Apply' to save the current settings.
- Click 'Cancel' to return to the previous setting.
- Click 'Default' to settings to the factory defaults.

Network Status

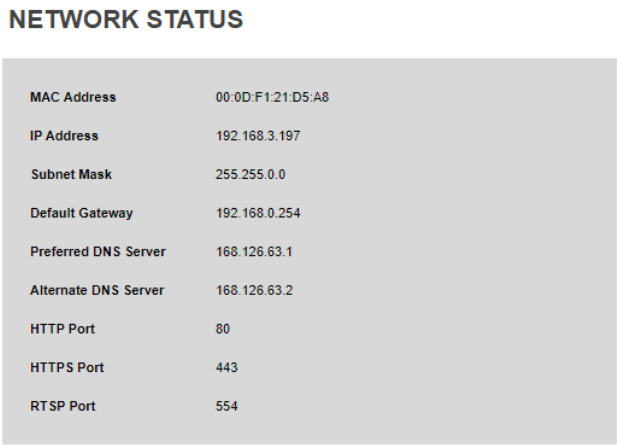

NETWORK STATUS

MAC Address	00:0D:F1:21:D5:A8
IP Address	192.168.3.197
Subnet Mask	255.255.0.0
Default Gateway	192.168.0.254
Preferred DNS Server	168.126.63.1
Alternate DNS Server	168.126.63.2
HTTP Port	80
HTTPS Port	443
RTSP Port	554

This menu displays the camera's current network settings. To make any changes to the settings, you must go to the appropriate network settings tab.

Set up - Network Set up
Network Settings

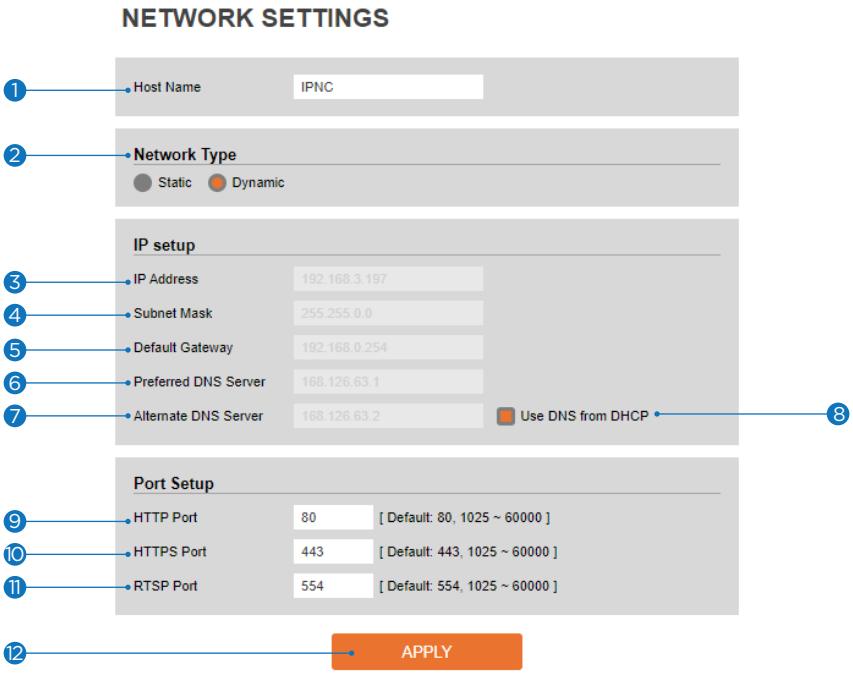

❶ **Host name -** Using the DNS' service, the camera specified by hostname can be discovered in a network.

❷ **Network Type -** Define the network IP address type. Select Static Mode for a fixed IP or Dynamic Mode for a dynamic IP address.
If you select Static Mode, enter the camera's IP Address, Subnet Mask, Gateway, DNS Server, and all ports.
If you select Dynamic Mode, the DHCP network requirements will automatically assign the IP address. If you click 'Apply,' the system will reboot, and you must reconnect the camera using the new IP address.

❸ **IP Address -** A unique string of numbers, divided into four octets (ranging from 0-255), used to identify the device over a network.

❹ **Subnet Mask -** Determines the range of IP address options within the network.

❺ **Default Gateway -** IP address of the forwarding host within the network; the router's IP address most commonly used.

❻ **Preferred DNS Server -** Address of the decentralized system used to translate alphabetic names into IP addresses.

❼ **Alternate DNS Server -** Secondary address of the decentralized system used to translate alphabetic names into IP addresses.

❽ **Use DNS from DHCP** - If selected, the DNS information will be filled out automatically by the DHCP server.

❾ **HTTP Port -** The HTTP port can be set to the default 80 port or between 1025 to 60000.

❿ **HTTPS Port -** The HTTPS port can be set to the default 443 port or any value between 1025 to 60000.

⓫ **RTSP Port -** The RTSP port can be set to the default 554 port or any value between 1025 to 60000.

⓬ Click 'Apply' to save all settings.

※ If the network type is dynamic, the IP address is changed in the following cases. In these cases, the IP address needs to be searched again, and the camera needs to be reconnected:

- When the camera's power is switched off and on.
- After firmware update, or when the camera is reset to its default settings and reboot.

Set up - Network Set up
Auto IP Settings

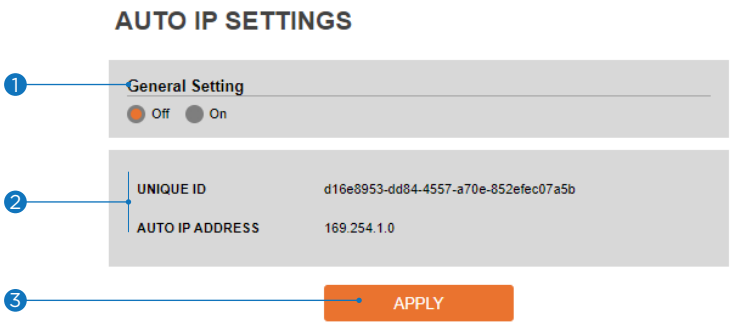

1 **General Setting -** Enable or disable the Auto IP Settings.

2 **Auto IP Settings Information -** Display the camera's Unique ID and Auto IP address.

3 Click 'Apply' to save all settings.

Set up - Network Set up
ONVIF Settings

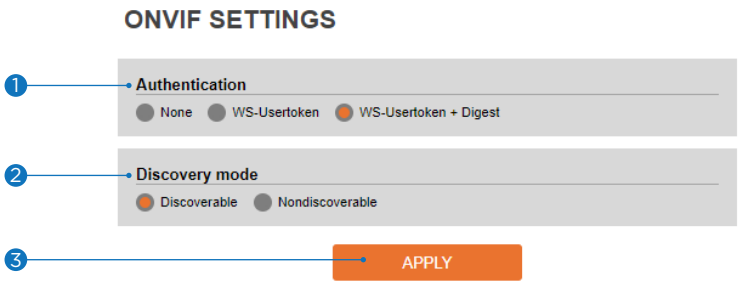

1 **Authentication**
None: Allow access to the camera without ONVIF authentication.
WS - Usertoken: Allow access to the camera with WS-User Token of ONVIF authentication.
WS - Usertoken + Digest: Allow access to the camera with WS-User Token and Digest of ONVIF authentication.

2 **Discovery Mode -** Enable or disable discovery mode.

3 Click 'Apply' to save all settings.

Set up - Network Set up
UPNP Settings

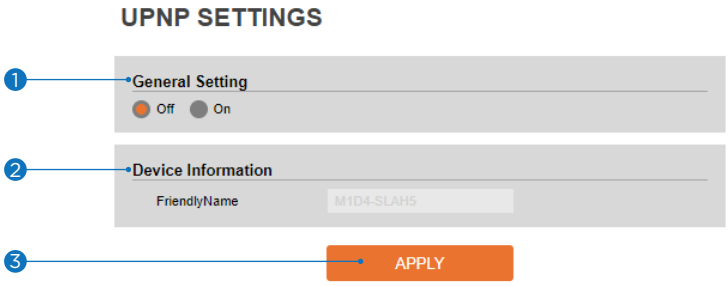

1. **General Setting -** Enable or disable the UPNP function.

2. **Friendly Name -** Define the friendly name. Support a maximum of 30 characters and special characters.
   - Do not use: / ~ ! $ ( ) { } [ ] ; ,
   - Acceptable special characters include; @ . _ -

3. Click 'Apply' to save all settings.

Set up - Network Set up
DDNS Settings

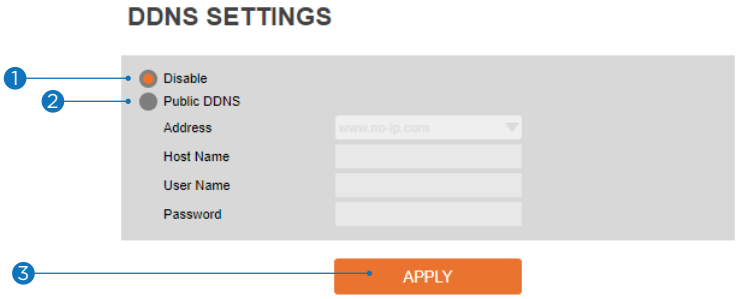

1 **DDNS Disable -** If it is selected, the DDNS service does not work.

2 **Public DDNS -** To use a public DDNS service, select a site address listed on the list. After filling out the site's Host Name, the setup is completed by entering the username and password registered in that DDNS site.

DDNS Provider	Site Address
DynDNS	www.dyndns.com
No-IP	www.no-ip.com

- If you set up DDNS properly, the IP address of your camera will be updated automatically whenever the IP address is changed, or the system is rebooted.
- If an IP update from the DDNS site fails, the camera will keep retrying in one (1) minute intervals.

3 Click 'Apply' to save all settings.

Set up - Network Set up
FTP Settings

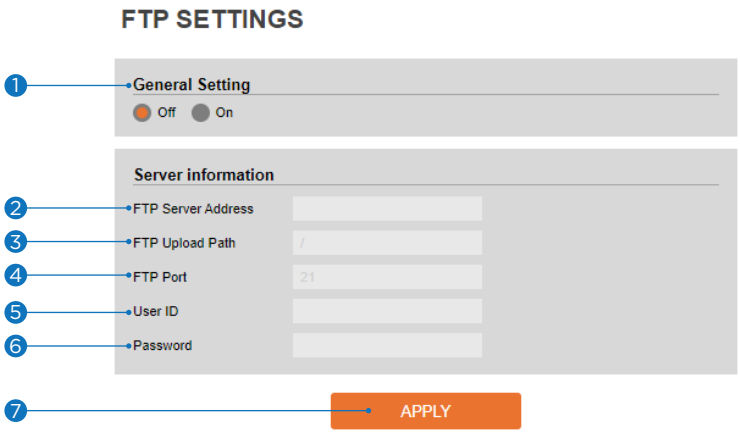

An FTP needs to be set up to transfer/save the image to the relevant sites through FTP.

1 **General Setting -** Enable or disable the FTP function.

2 **FTP Server Address -** Define FTP Server IP Address. If the IP Address form is incorrect, a message box will be shown to try again.

3 **FTP Upload Path -** Define a path in the FTP server to store image. For the path name, English Alphabet, numbers and special characters (/ ~ !@ $ ^ ( ) _ - { } [ ] ; ,) can be used.

4 **FTP Port -** Define the FTP Server Port. If the port is not appropriate, accessing FTP Server is impossible.

5 **User ID -** Define User ID to access the FTP Server. Fill out the correct User ID registered in the FTP Server.

6 **Password -** Define the password to access the FTP Server. Fill out the correct password registered in the FTP Server.

7 Click 'Apply' to save all settings.
※ Refer to the above image for an example.

Set up - Network Set up
SMTP Settings

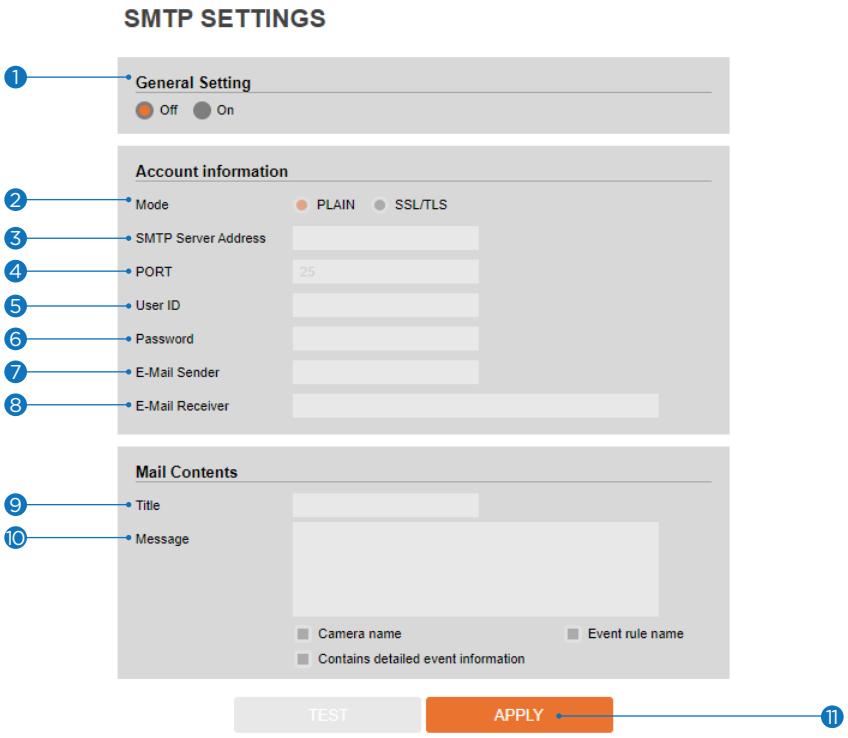

To send/save the image to the relevant sites by email, an SMTP needs to be set up.

1 **General Setting -** Enable or disable the SMTP function.

2 **Mode -** Select the security mode of SMTP from Plain or SSL/TLS. After checking the account set up of your SMTP Server, you may select one.

3 **SMTP Server Address -** Define the SMTP Server Address. If the IP Address form is incorrect, a message box will be shown to try again.

4 **Port -** Define the Port used in the Plain or SSL/TLS security mode above.

5 **User ID -** Define the User ID to access the SMTP Server. Fill out the correct User ID registered in the SMTP Server.

6 **Password -** Define the Password to access the SMTP Server. Fill out the correct Password registered in the SMTP Server.

7 **E-Mail Sender -** Define the e-mail address of the email Sender. It will be displayed as the sender when the camera sends an email.

8 **E-Mail Receiver -** Define the e-mail address of the email Receiver. It will be displayed as the Receiver when the camera sends an email.

9 **Title -** Define the title of the Email when the camera sends an email.
※ The title of the email is limited to 40 characters including the spaces.

10 **Message -** Define the contents of the email when the camera sends an email. The message of the email is limited to 40 characters including the spaces.

11 Click 'TEST' to send a test message 'Apply' to save all settings.

Set up - Network Set up
SNMP Settings

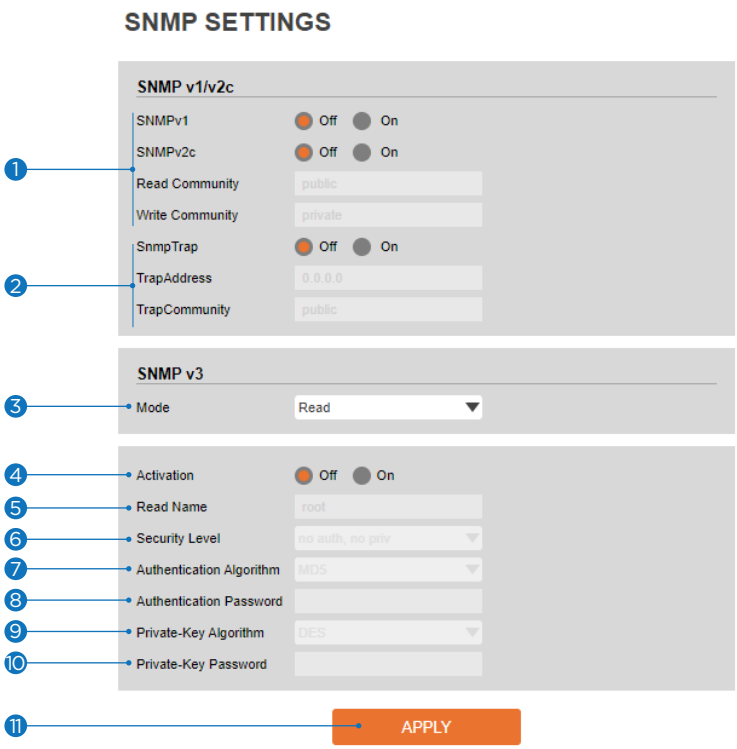

1 **SNMPv1/SNMPv2 -** Select the SNMPv1/SNMPv2 option and type the names of Read and Write communities.

SNMP trap can be used to check for operational thresholds or failures periodically defined in the MIB.

2 **SNMP Trap -** Enable or disable the SNMP trap.

SNMPv3 contains a higher cryptographic security level, allowing you to set the Authentication and Encryption passwords.

3 **Mode -** Select either Read or Read/Write mode.

4 **Activation -** Select the mode to enable or disable.

5 **Read/Write name -** Define Read name and Write name.

6 **Security Level -** Select one of no auth, no priv/auth, priv.

7 **Authentication Algorithm -** Select MD5 or SHA as the authentication method.

8 **Authentication Password -** The Authentication Password is encryption for authentication and is between 8 to 30 digits long.

9 **Private-Key Algorithm -** Select DES or AES as the encryption algorithm.

10 **Private-Key Password -** Information protection password is a private encryption and is between 8 to 30 digits long.

11 Click 'Apply' to save all settings.

Set up - Network Set up
HTTP Action

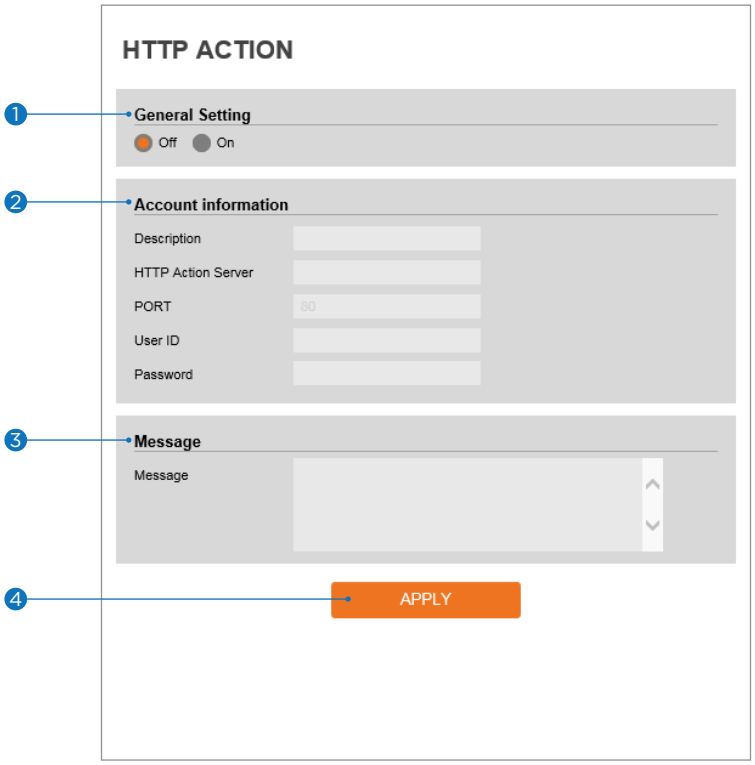

1 **General Setting -** Enable or disable the camera to send an HTTP action when an event occurs. When enabled, the camera can notify a monitoring software using HTTP protocol.

2 **Account information -**
Description: Enter a short description for the action.
HTTP Action Server: Enter the HTTP address of the receiving server. This is the server that will receive the HTTP action notification from the camera.
PORT: Enter the port number for the receiving server.
User ID: Enter the user ID information for the receiving server.
Password: Enter the password information for the receiving server.

3 **Message -** Enter the default message that will be included with the alert.

4 Click 'Apply' to make the above setting effective.

Setup - Network Setup
RTSP Information

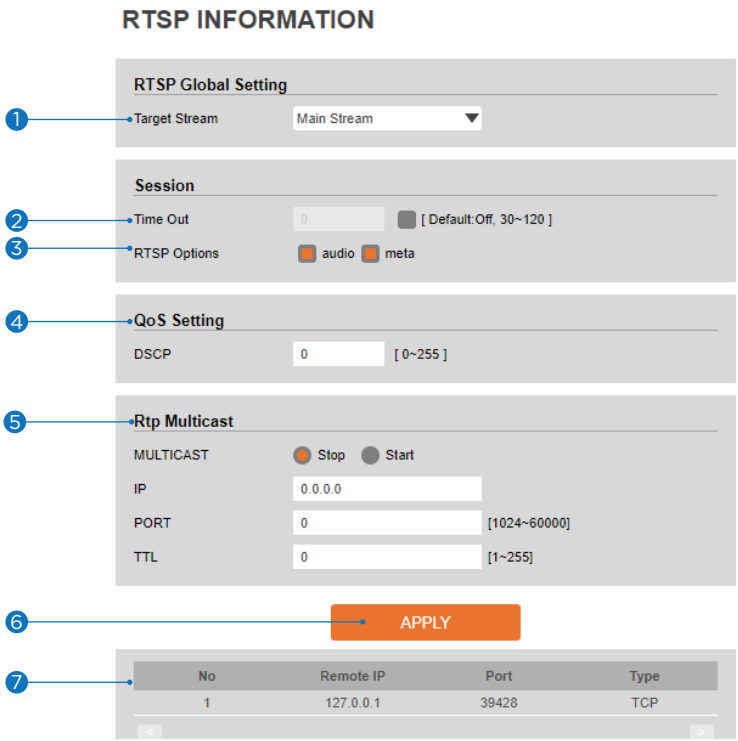

1 **Target Stream -** Select the stream you want to set.

2 **Time out -** Set, in seconds, the time limit fo the RTSP stream to disconnect. The RTSP time out is disabled by default.

3 **RTSP Options** - Check the box to include audio and/or metadat with the RTSP stream.

4 **QoS Setting -** Set the quality of service to ensure data transfer performance. select from 0~255. The function is disabled by default.

5 **RTP Multicast -** Check RTP Multicast Start/Stop. RTP multicast is disabled by default.
To activate RTP Multicast:
1. Click on the "Start" button to enable.
2. Enter an IP address, port for video streram control, and packet TTL information for the RTP Multicast.
3. Click 'Apply' to save all settings.

※ Users can set separate RTP mutlticasts for each stream.

6 Click 'Apply' to save all settings.
※ Click this button when completed setup each channels.

7 The table shows all active RTP settings.

Set up - Trigger Action Set up
Action Rules Configuration

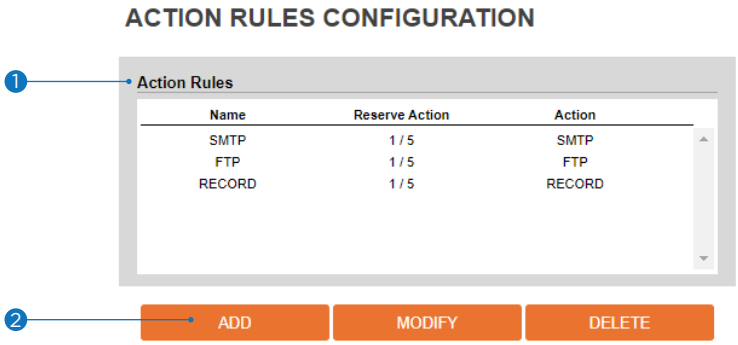

1 **Action rules List -** It indicates the custom action rule information added to the Action rules list.

2 Click 'Add' to add custom action rules.
- Click 'Modify' to modify selected items from the action rules list.
- Click 'Delete' to delete selected items from the action rules list.

Set up - Trigger Action Set up
Action Rules Configuration

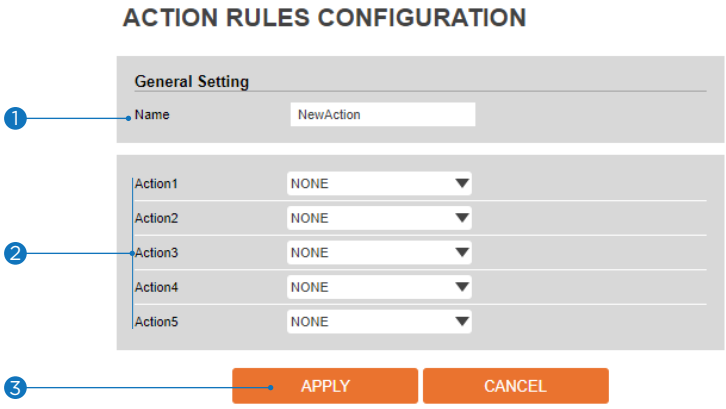

1 **Name -** Define the name of the action rules.
※ Input text cannot exceed the limit (3~15 characters).

2 **Action1 ~ Action5 -** Select the action to take If the event occurs.

3 Click 'Apply' to save all settings.
※ Click 'Cancel' to return to the previous menu.

Set up - Trigger Action Set up
Image Transfer Configuration

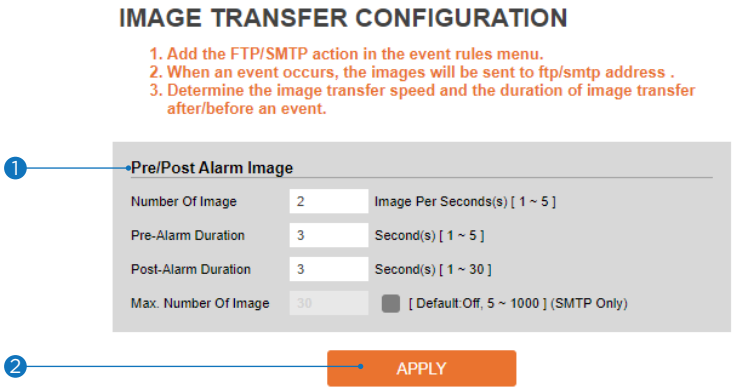

1. **Pre/Post Alarm Image -** Image Transfer due to an event is configured by setting the image transfer rate and Pre/Post alarm duration.
   - **Number of images:** Define the number of images transferred per second.
   - **Pre-alarm duration:** Define the duration of the image transfer before an event.
   - **Post-aalrm duration:** Define the duration of the image transfer after an event.
   - **Max. number of images:** Set a limit to the number of images transferred after an event. This is disabled by default.

2. Click 'Apply' to save all settings.

Set up - Trigger Action Set up
Relayout Configuration

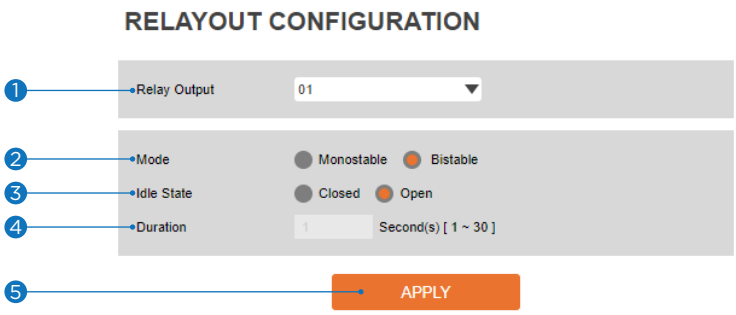

1 **Relay Output -** Select the Relay output.
The number of relay outputs available depends on the camera model.

2 **Mode -** Select the monostable/bistable for relay mode.

3 **Idle State -** Select whether the contact is normally opened or closed.

4 **Duration -** Relay out is operated during the setting time.
In monostable mode, this function must be set up.

5 Click 'Apply' to save all changes.

Set up - Event Set up
Event Rules Configuration

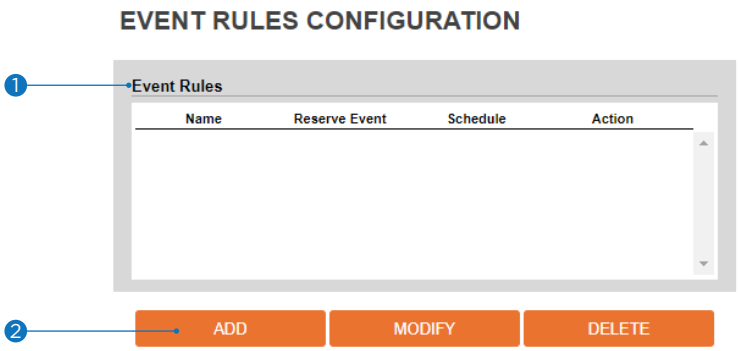

1 **Event Rules List -** Indicates the custom Event Rule information added to the Event Rules list.

2 Click 'Add' to add custom event rules.
- Click 'Modify' to modify selected items from the event rules list.
- Click 'Delete' to delete selected items from the event rules list.

Set up - Event Set up
Event Rules Configuration

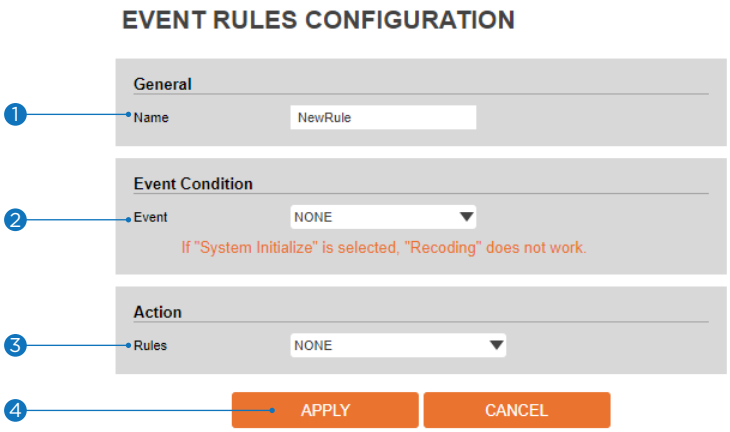

❶ **Name -** Define the Event rule name.

❷ **Event -** Select the event among motion detection, network disconnection, illegal login detected, temperature critical, video analytics, system initialized and sensor detection.
- Click 'Cancel' to return to the previous setting.
- You need at least one event.

❸ **Rules -** Select the action rule defined in the Trigger Action-Action rule menu.

❹ Click 'Apply' to save the current settings.
- Click 'Cancel' to return to the previous setting.

Set up - Event Set up
Motion Detection Configuration

1 **Activation Areas -** The camera supports up to four (4) separate motion detection zones. At least one zone must be activated to detect motion in the camera's view. Check the box next to the zone you want to activate. Click the preview screen and click and drag the edges of the detection zone to adjust the size and position of the camera's view.

2 **Sensitivity -** Define the sensitivity of motion detection. If a high value is selected, it will detect very small motion, while it becomes relatively insensitive when a low value is selected.

3 **Color -** Identify the detection zone on the preview according to the color of the zone.

4 **Status -** Event Alert Icon( ) appears if 'Motion Detection' is activated and motion is being detected.

5 Click 'Apply' to save all settings.
Click 'Cancel' to return to the previous setting.

Set up - Event Set up
Temperature

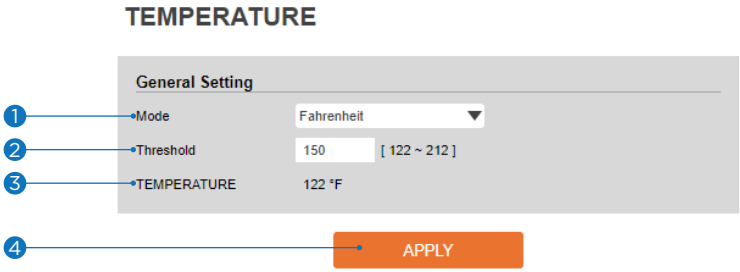

1 **Mode -** Select Fahrenheit or Celsius.

2 **Threshold -** Define the temperature at which the event trigger occurs.

3 **Temperature -** It indicates the current temperature of the IP camera.

4 Click 'Apply' to save all settings.

Set up - Event Set up
Alarm Configuration

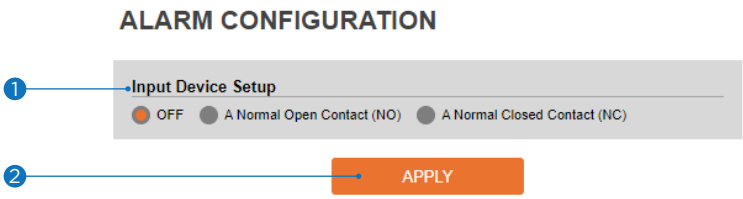

1 **Input Device Set up -** Select the input device type from OFF, N.O. and N.C.

	Operation
OFF	Ignore this input sensor.
NO	The contact is normally open and closed when activated.
NC	The contact is normally closed and open when activated.

2 Click 'Apply' to save all changes.

Set up - Record Set up
Record Management

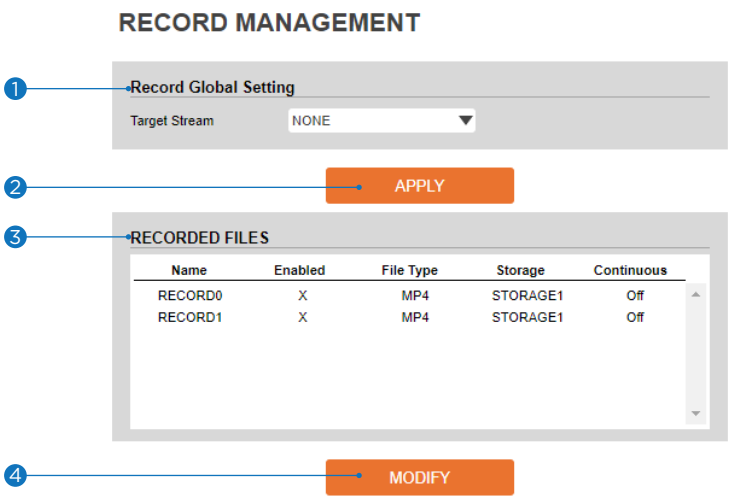

❶ **Target Stream -** Select the channel you want to record the video.

❷ Click 'Apply' to save the current settings.

❸ **Recording List -** Display the information about the recording settings.

❹ Click 'Modify' to modify the selected item in the recording list.

Record 0: Select for continuous recording.
Record 1: Select for event recording.

Set up - Record Set up
Record Management

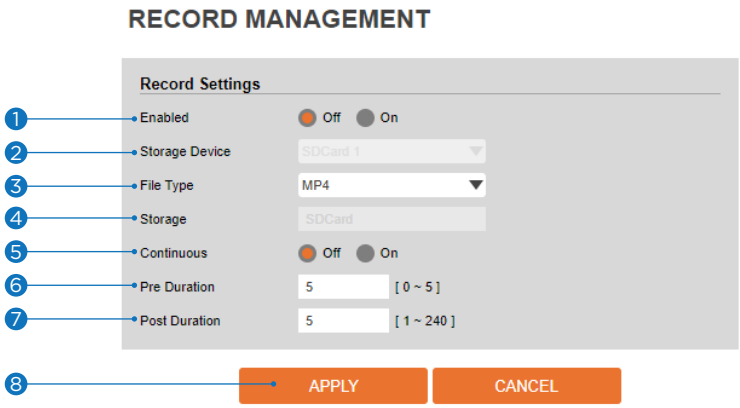

❶ **Enabled -** Enable or disable this function.

❷ **Storage Device -** This option shows the SD card currently mounted on the camera.

❸ **File Type -** Select the recording file type.
※ Currently, the camera supports MP4 file type.

❹ **Storage -** Select the storage type. SD Card (Disabled) selection is not allowed.

❺ **Continuous -** The camera will start recording automatically if continuous mode is enabled.

❻ **Pre-Duration -** Define the duration of recording before an event.

❼ **Post-Duration -** Define the duration of image transfer after an event.

❽ Click 'Apply' to save the current settings.
※ Click 'Cancel' to return to the previous setting.

Set up - Record Set up
Recorded Files

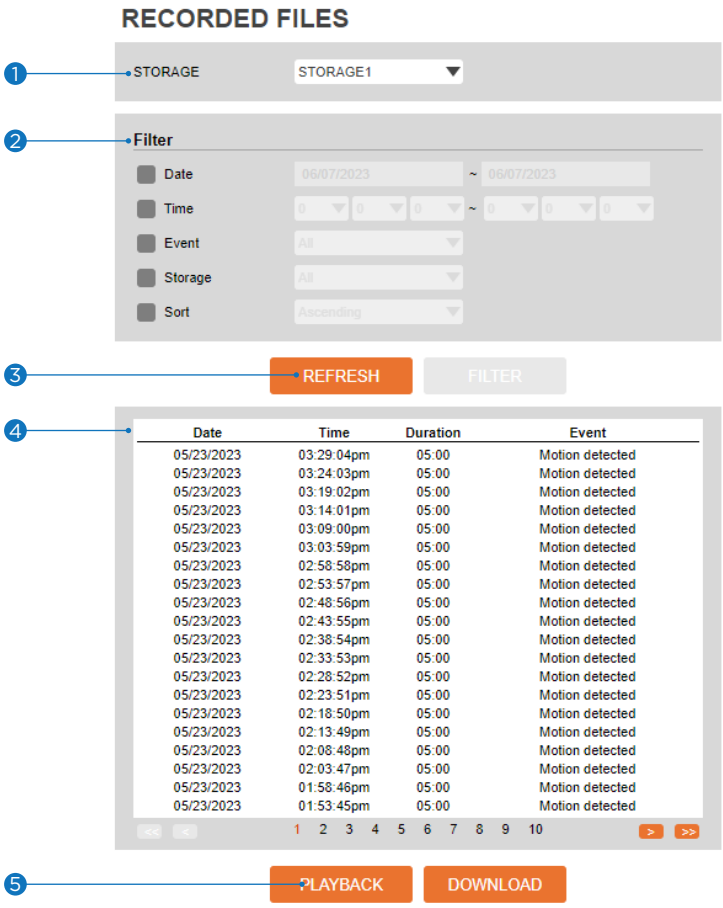

1 **Storage -** Select Storage from the available options.

2 **Filter -** Select the date/time, event, sort, or storage format to filter the recorded video results.

3 Click the 'Refresh' button to refresh the search results as needed.
- Click 'Filter' to view the filtered recorded video.

4 **Recording List -** Display the information of the recorded video.

5 Click 'Playback' to view the selected item in the list of recorded video results.
- Click 'Download' to download the selected item.
  - When you click 'Download,' the following window appears.
  - When downloading, please fill up the purpose of the file download. The field is limited to 30 characters. (This information will be shown on the Log page with the download time).

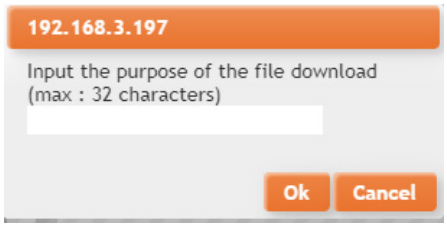

- When playing back recorded MP4 files with H.265 (HEVC) codec, the video may not play due to a performance issue with the VLC plug-in.

Set up - Record Set up
Recorded Files

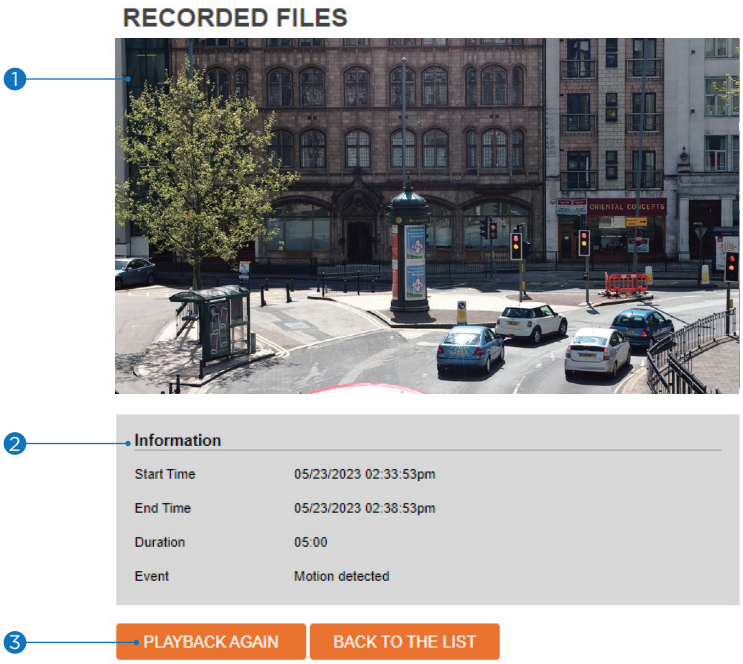

1 **Recording Video Viewer -** Play the recorded video.

2 **Recording Video Information -** Display information about the recorded video.

3 Click 'Playback' to view the recorded video again.
Click 'Back' to return to the previous menu.

Storage Configuration

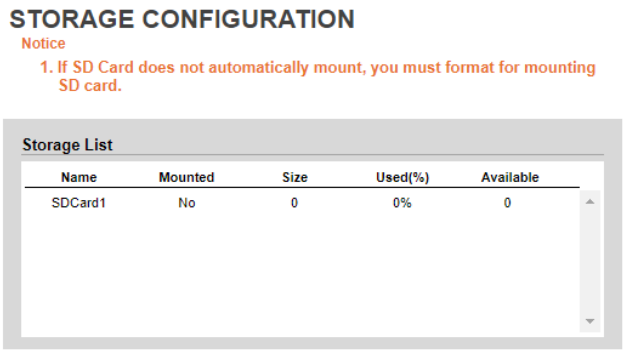

Display the SD card information mounted on the device.

- Select an item from the Storage List to configure its related functions.

Set up - Record Set up
Storage Configuration

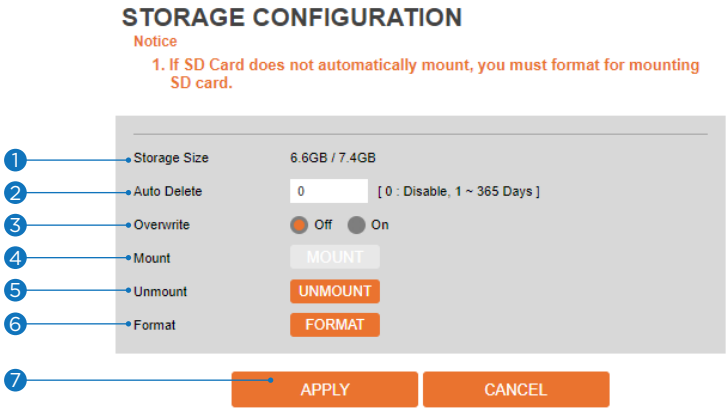

❶ **Storage Size -** Total capacity of the SD card and the remainder of it are displayed.

❷ **Auto Delete -** Select the period for auto delete. The data stored before the set period will be deleted automatically.
※ Delete all stored images older than the selected time.

❸ **Overwrite -** Once enabled, new data will overwrite the oldest data once the SD card has less than 8MB of storage. If OFF is selected, once the SD card has less than 8MB available, the camera will stop recording to the SD card.

❹ **Mount -** If the loaded SD memory card is unmounted or is not automatically mounted, mount the SD memory card to the camera.

❺ **Unmount -** remove the SD card from the device.

❻ **Format -** Delete all the contents stored in the SD card.

❼ Click 'Apply' to save the current settings.
※ Click 'Cancel' to return to the previous setting.

Set up - Security Set up
IP Address Filter Configuration

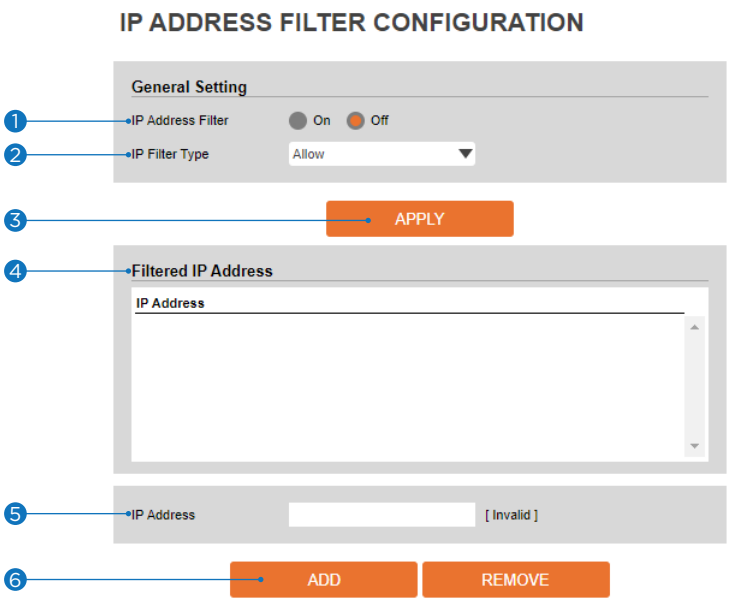

1 **IP Address Filter -** Enable or disable this function.

2 **IP Filter Type -** Select the recording IP filter type.

3 Click 'Apply' to save all settings.

4 **Filter IP Address -** Display the filtered IP address.

5 **IP Address -** Define the IP address you want to apply to the IP filter.

6 Click 'Add' to add the IP address to the list.
※ Click 'Remove' to remove the IP address selected in the list.

Set up - Security Set up
RTSP Authentication Configuration

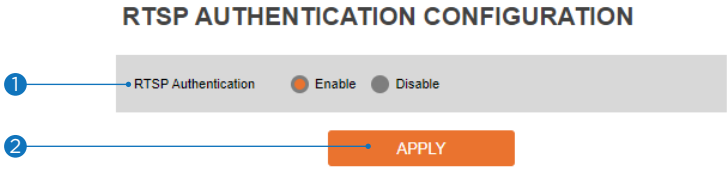

1 **RTSP Authentication -** Enable or disable the RTSP authentication.

2 Click 'Apply' to save all settings.

Set up - Security Set up
IEEE 802.1X Configuration

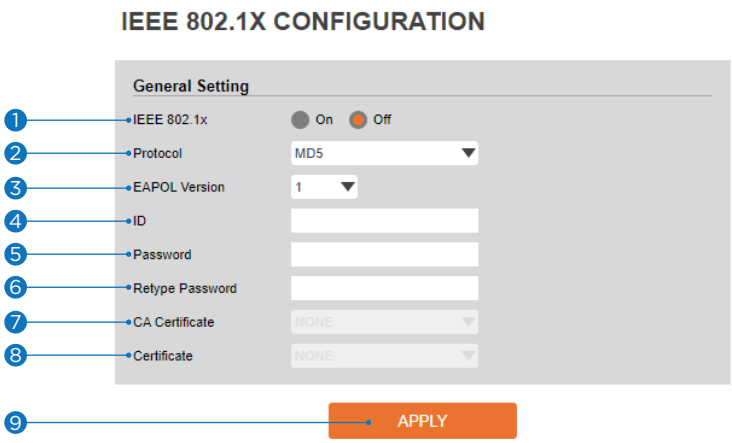

The feature is needed when connecting the camera to the network protected by IEEE 802.1X.

1. **IEEE 802.1x -** Enable or disable the IEEE 802.1x feature.

2. **Protocol**
   - MD5: It provides one-way password-based network authentication of the client.
   - PEAP: It is similar to TTLS in that it does not require a certificate on the client side.
   - TTLS/MD5: It does not require a certificate on the client side.
   - TLS: It relies on client-side and server-side certificates to perform authentication.

3. **EAPOL Version -** Select the EAPOL Version.

4. **ID -** Type the ID to identify the client in the IEEE 802.1X authentication server.

5. **Password -** Type the Password to identify the client in the IEEE 802.1X authentication server.

6. **Verify -** Verify Password.

7. **CA Certificate -** Select the CA certificate required for TLS, TTLS, and PEAP authentication.

8. **Certificate -** Select the client certificate required for TLS authentication

9. Click 'Apply' to save all settings.

Set up - Security Set up
HTTPS Configuration

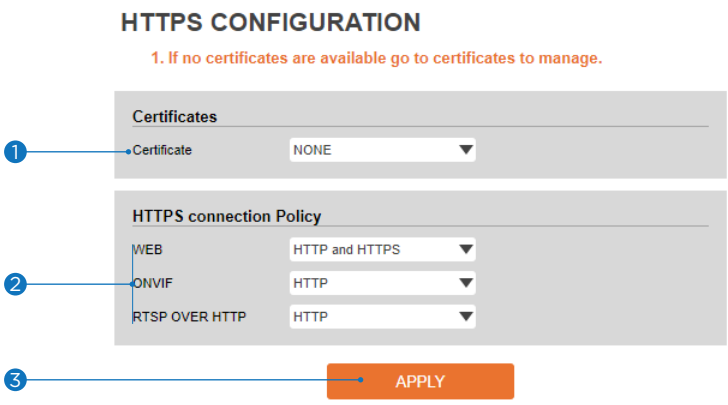

HTTPS encrypts session data over SSL or TLS protocols instead of using plain text in socket communications.

1. **Certificate -** Select an installed certificate.
   - If you cannot select a certificate, please install the certificate from the Security->Certificates menu.

2. **HTTPS connection Policy -** Select HTTP, HTTPS, or HTTP and HTTPS depending on the connected web, ONVIF, RTSP over HTTP.
   - WEB: HTTP, HTTPS, or HTTP and HTTPS.
   - ONVIF, RTSP OVER HTTP: HTTP or HTTPS.

3. Click 'Apply' to save all settings.
   - When HTTPS mode is chosen, input https://<IP Address> to connect to the camera.

Set up - Security Set up
Certificates Configuration

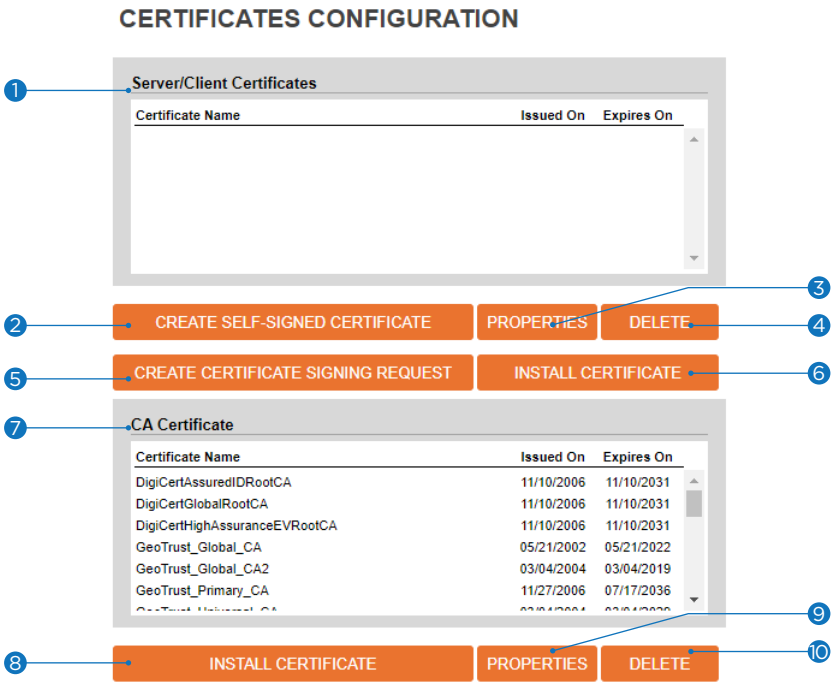

1. **Server/Client Certificates -** Shows the installed certificates.

2. **Create Self-Signed Certificate -** A self-signed SSL certificate is an identity certificate signed by its creator. But they are considered to be less trustworthy.

3. **Properties -** Shows information about the selected certificate.

4. **Delete -** Delete the selected certificate.

5. **Create a Certificate signing request -** This is the encoded data that contains the necessary information for issuing the certificate.
   ※ When creating the CSR (Certificate Signing Request), they must be filled in.

6. **Install Certificate -** Install Certification

7. **CA Certificate -** Shows the installed CA certificates.

8. **Install CA Certificate -** Install Certification. See the detail page.

9. **Properties -** Shows information about the selected certificate.

10. **Delete -** Delete the selected CA certificate.

Set up - Security Set up
Certificates Configuration

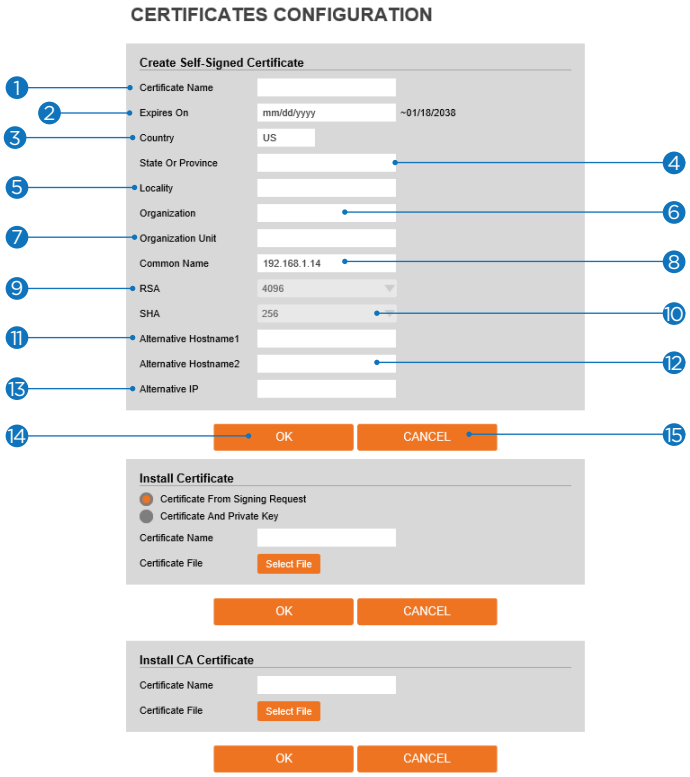

Detail for Creating a Self-Install Certification.

1. **Certificate Name:** enter a name or label to identify the certificate. Do not use spaces.
2. **Expires on:** set an expiration date for the certificate. This setting will determine how long the certificate will remain valid before it will need to be replaced.
3. **Country:** enter the country where the camera is installed.
4. **State or Province:** enter the state or province where the camera is installed.
5. **Locality:** enter the name of the city where the camera is installed.
6. **Organization:** enter the company name.
7. **Organization unit:** enter a company department.
8. **Common Name:** by default, the IP address of the camera will be used. If a DNS server will be used when connecting instead, you can enter the common identifier here. For example, the domain of "*digital-watchdog.com" could be used when connecting through HTTPS if it was registered on DW's server.
9. **RSA:** this represents the level of security for the public-key cryptography algorithm. By default, the setting is set to 4096-bit encryption and cannot be changed.
10. **SHA:** this represents the level of security for the Secure Hash Algorithm (SHA) that is used for hashing data and certificate files. By default, the SHA is set to 256-bit encryption and cannot be changed.
11. **Alternative Hostname 1:** enter the alternate domain or host for this certificate. For example, ".digital-watchdog.local" can be used if the domain has been registered on a DNS server.
12. **Alternative Hostname 2:** enter an alternate domain or host for this certificate.
13. **Alternative IP:** by default, the Alternative IP is set to the IP Address of the camera. You can enter the Public IP Address of the network here to use an HTTPS connection when connecting over WAN.
14. **OK -** Request installing a CA certificate.
15. **Cancel -** Cancel installing the CA certificate and go back to the certificate configuration.

Set up - Security Set up
Certificates Configuration

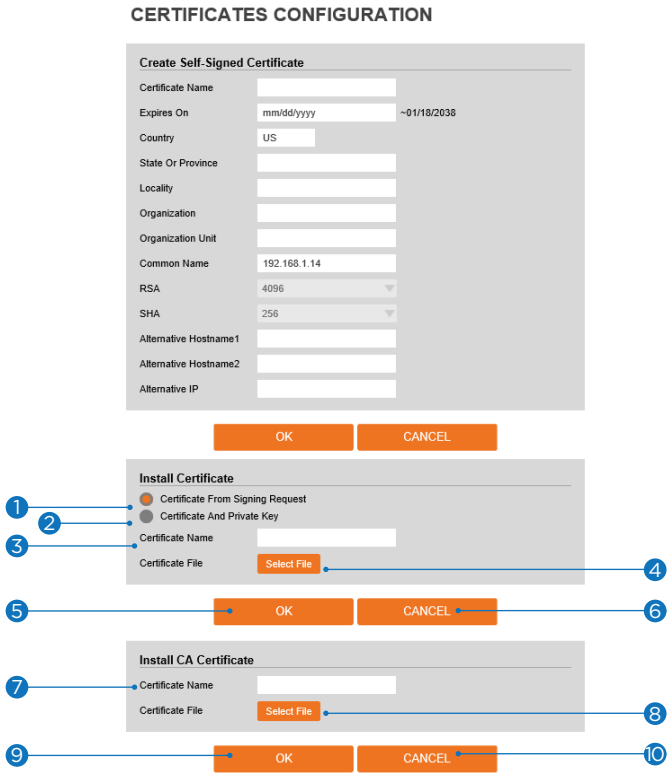

Detail for Install Certification.

1 **Certificate From Signing Request -** Select to install a signed certificate returned from the CA.

2 **Certificate And Private Key -** Select to install Certificate And Private Key to install a certificate and private key.

3 **Certificate Name -** Enter a unique name to identify a certificate.

4 **Select File -** Choose the certification file.

5 **OK -** Request installing a certificate.

6 **Cancel -** Cancel the certificate installation and go back to certificates configuration.

Detail for Install CA Certification.

7 **Certificate Name -** Enter a unique name to identify the CA certificate.

8 **Select File -** Choose a CA certification file

9 **OK -** Request installing a CA certificate.

10 **Cancel -** Cancel installing the CA certificate and go back to the certificate configuration.

Set up - Security Set up
Auto Lock

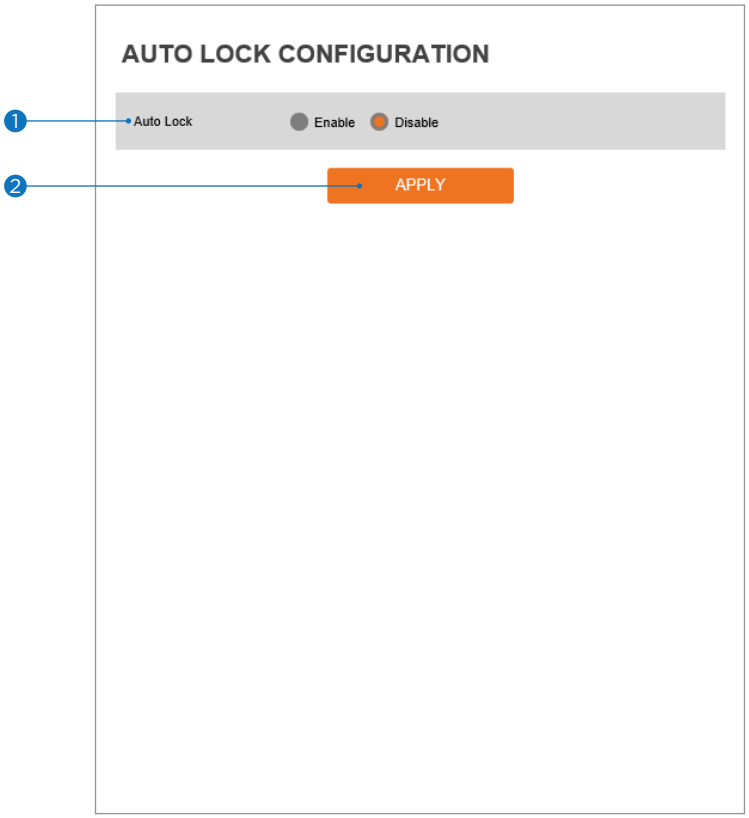

1 **Auto Lock -** Enable or disable the Auto Lock function. When enabled, the system will lock itself for five (5) minutes after three (3) failed login attempts.

2 Click 'Apply' to save all settings.

Set up - System Set up
System Information

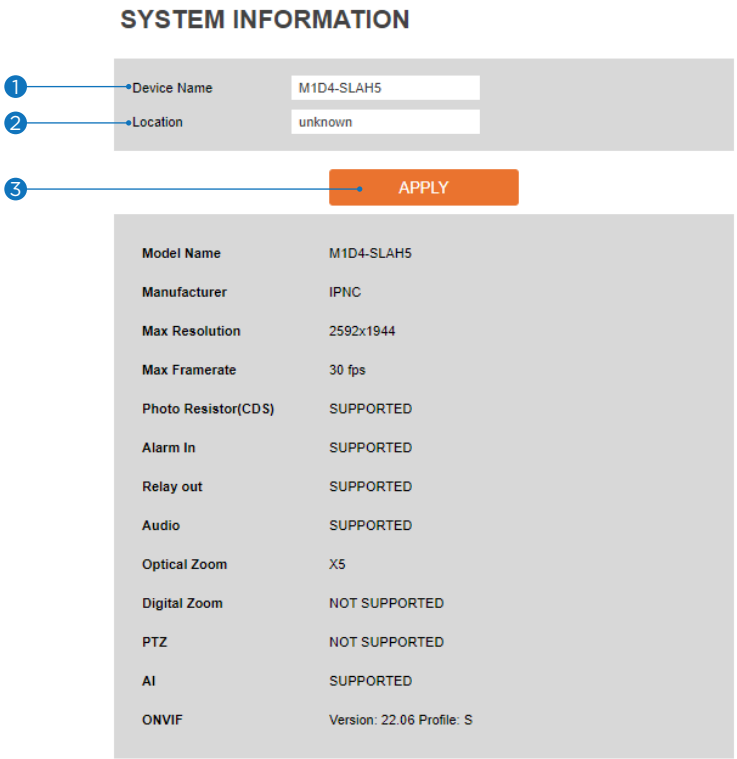

System Capability information.

1 **Device Name -** You can define the device name.

2 **Location -** You can define the device's location.

3 Click 'Apply' to save all settings.

System Diagnostics

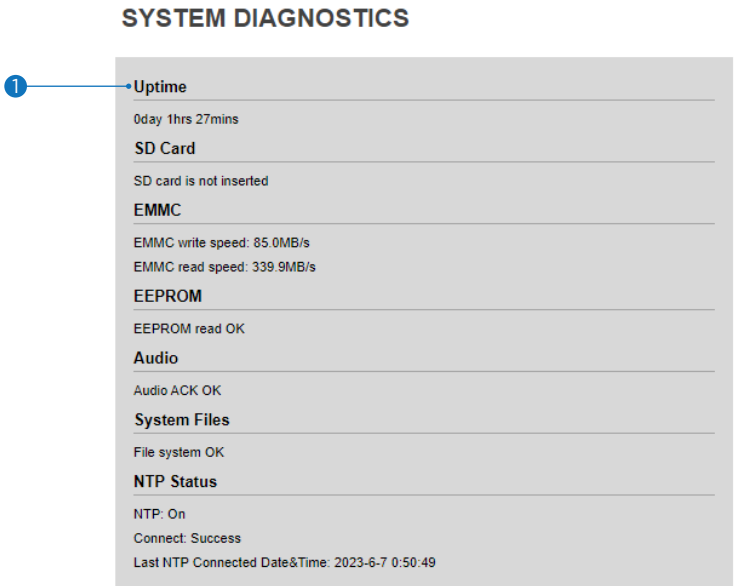

Shows basic hardware functions after inspection.

1 Shows Uptime, SD card, EMMC, EEPROM, Audio, System Files, and NTP Status.

Warning:
If the camera connection is terminated abnormally, a download button will appear on the diagnostics page to download and check the error information.

Configuration Backup

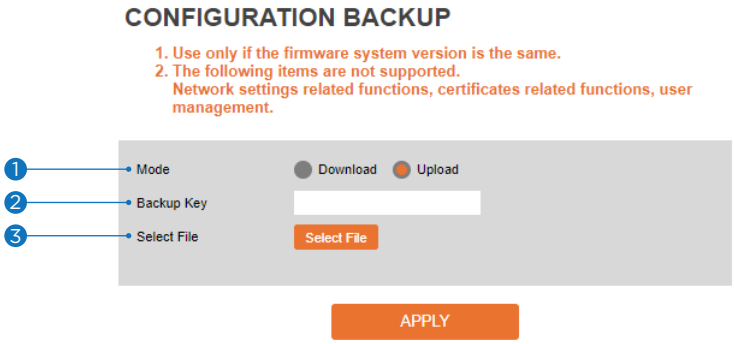

Use this page to import or export the camera settings.

1 Select to download or upload camera settings.
- The following settings are NOT included in the backup files: Network (except RTSP information), System > user management, and PTZ settings (on PTZ models).
- Download: save the camera's current settings. Check the box next to 'Download,' enter a backup key and click APPLY. The backup key can be of any value. Remember the backup key. It will be required when uploading the file.
- Upload: upload configuration settings from another camera. Check the box next to 'Upload.' Enter the backup key for the configuration backup. Click 'Select File' to locate the configuration backup file and select it on your computer. The file name and upload status will appear. Click 'Apply' to start the upload. A popup window will appear when the configuration upload is complete.

2 **Backup Key -** To set the certification key for setting file backup. For the backup key set when downloading, you must enter the same key when uploading.

3 **Select File -** To upload previously exported settings, click 'Select File' and select the file 'pconf_enc.tar.' Click 'Apply.'

NOTE:
The configuration backup download is available when accessing the camera directly from the web browser. If accessing the camera from the DW Spectrum IPVMS client, this feature is disabled.

Set up - System Set up
Firmware Update

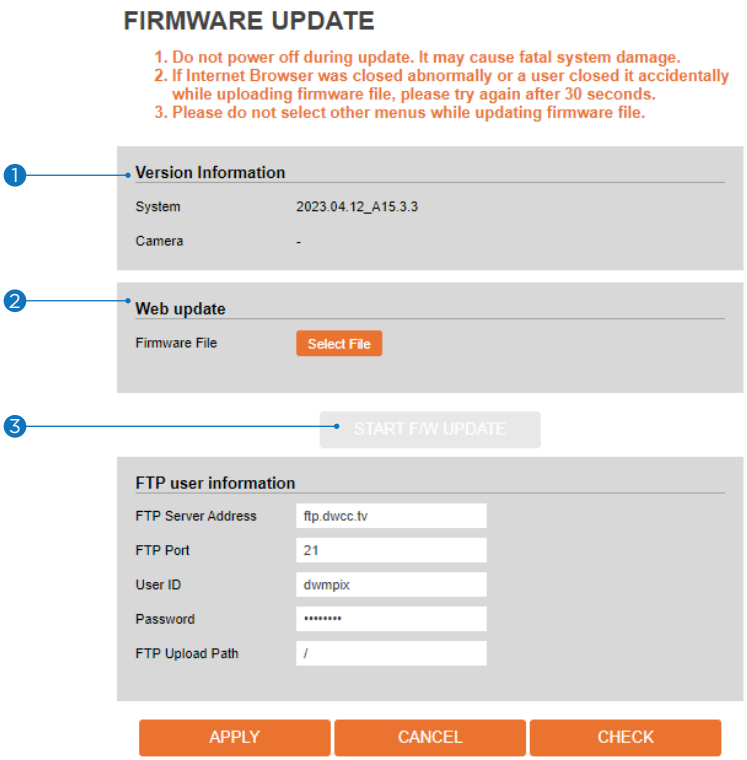

❶ **Version Information -** It shows the current Firmware Version in the system.

❷ **Web Update -** Select the Firmware file on your computer by clicking the [Select file] button.

❸ **Start F/W Update -** Click this button to start the update. Progress of uploading will be displayed using Progress Bar. An error message will be shown if you assign the wrong file name.

※ **Warning:**

1. Do not turn off the power to the camera during the firmware update. Interrupting the update may cause the system to become unstable. Once the update is completed, the system will reboot automatically.
2. Make sure to check the 'Notice' shown on the screen.
   The camera will reboot and show the login window if the firmware update is completed successfully.

Set up - System Set up
Date & Time Settings

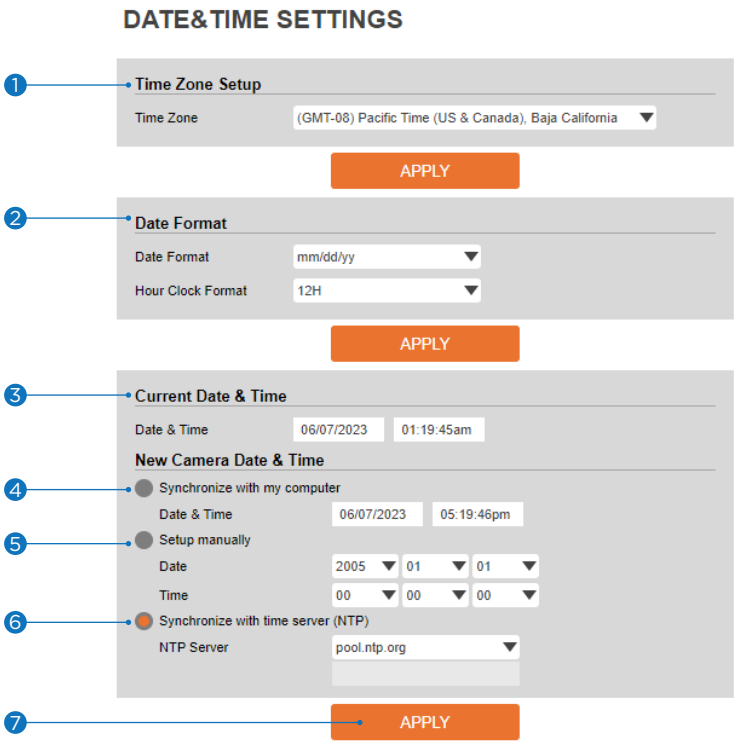

1 **TimeZone Set up -** Choose the time zone for the camera. It will be activated after clicking the 'Apply' button.
Before setting below 'New Camera Date and Time,' set the correct time zone first.

2 **Time Format -** Select the time format yy-mm-dd or mm/dd/yy.

3 **Current Date and Time -** Current date and time setting in the camera.

4 **Synchronize with my computer -** Set the date/time using those of the PC currently connected.

5 **Set up manually -** Set the date/time by typing manually.

6 **Synchronize with time sever (NTP) -** Choose the time server to connect to the current camera.
The date and Time will be updated automatically every hour when connected.

7 Click 'Apply' to save all settings.

Set up - System Set up
DST Settings

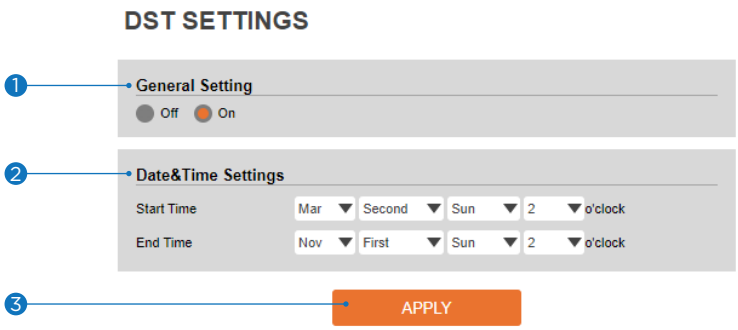

Daylight Saving Time (DST) is the practice of turning the clock ahead as warmer weather approaches and back as it becomes colder again.

1 **General Setting -** Enable or disable the DST function.

2 **Date and Time Settings -** Set the start time and end time that the DST applies.

3 Click 'Apply' to save all settings.

Set up - System Set up
Users Management

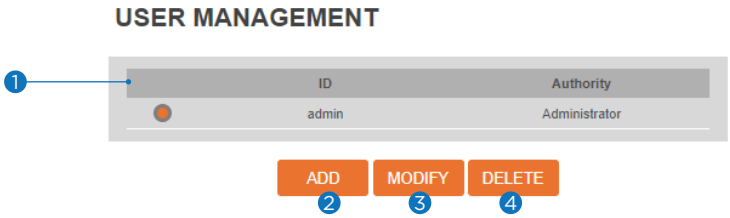

1 **Users -** List all the user accounts for authentication.

2 **Add -** Register a new user.

ID	Enter a new user ID. Admin already exists.
Password	Enter the user password. (Check the password)
Retype Password	Enter the user password again for verification.
Password Hint	Enter the password hint.
User Authority	Select Operator or Viewer. Viewer: Only monitoring is allowed. Operator: Most of the functions are allowed except 'Set up'.

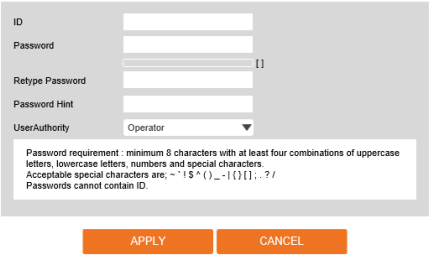

- The ID and Password are limited to 8 characters with at least two combinations of uppercase letters, lowercase letters, numbers and special characters.
  Acceptable special characters are ~ ' ! $ ^ ( ) _ - { } [ ] ; . ? /

Click 'Apply' to save all settings.

- Click 'Cancel' to return to the previous menu.

3 **Modify -** Modify the information of the user accounts registered. For the admin account, only the password can be modified.

4 **Delete -** Delete the selected user account. The admin account cannot be deleted.

Set up - System Set up
System Log

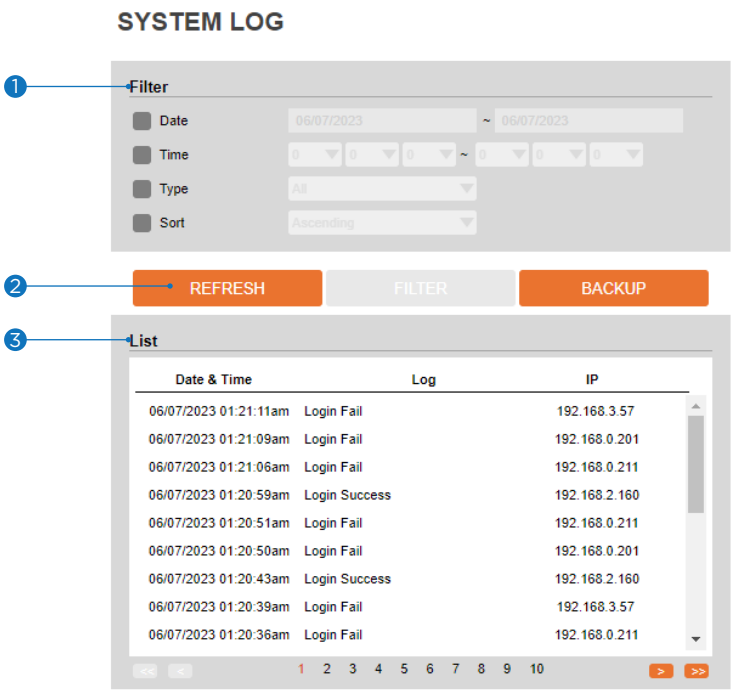

1 **Filter -** Select a date, time, sort, or type of log to filter the log.

2 Click the 'Refresh' button to refresh the log list.
- Click 'Filter' to view the filtered log.
- Click 'Backup' to back up the filtered log.

3 **System Log List -** The filtered log is displayed.

Set up - System Set up
Factory Reset

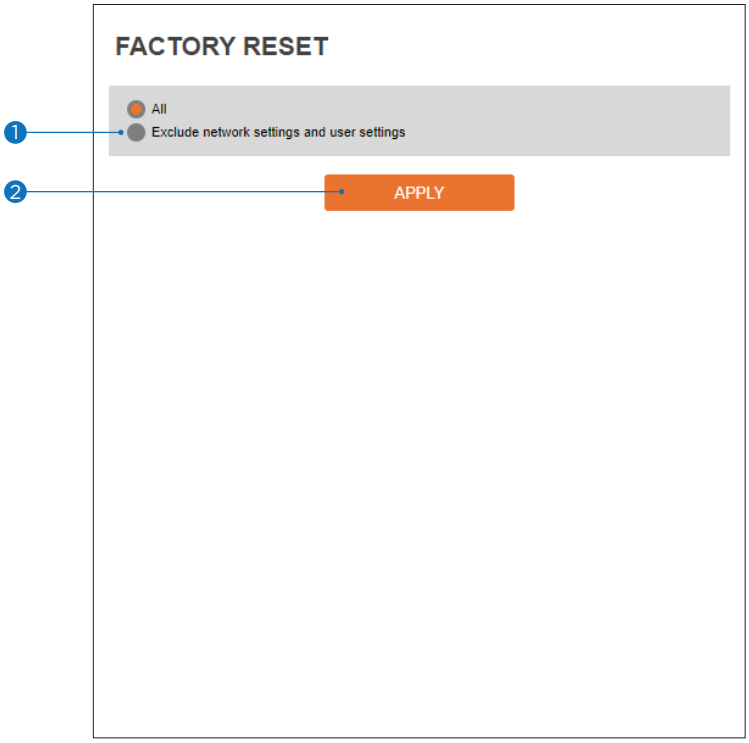

1 **Reset to the factory defaults -** Return the set up to the factory default.

All - Reset all Settings to the factory defaults.

Exclude Network Settings and User Settings - Reset all camera settings to factory default except for the network settings.

2 Click 'Apply' to save all settings.

Restart

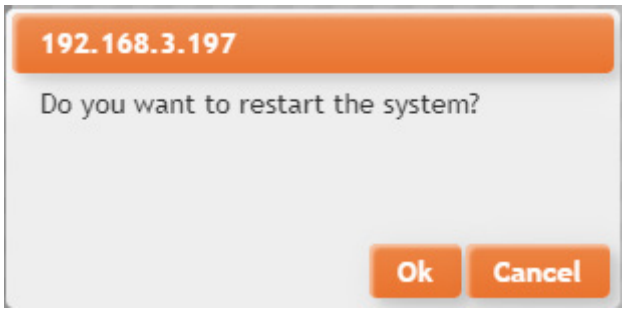

If you click the 'RESTART' menu, a message box will be shown to confirm. Click the 'OK' button to restart.

System Open Source License

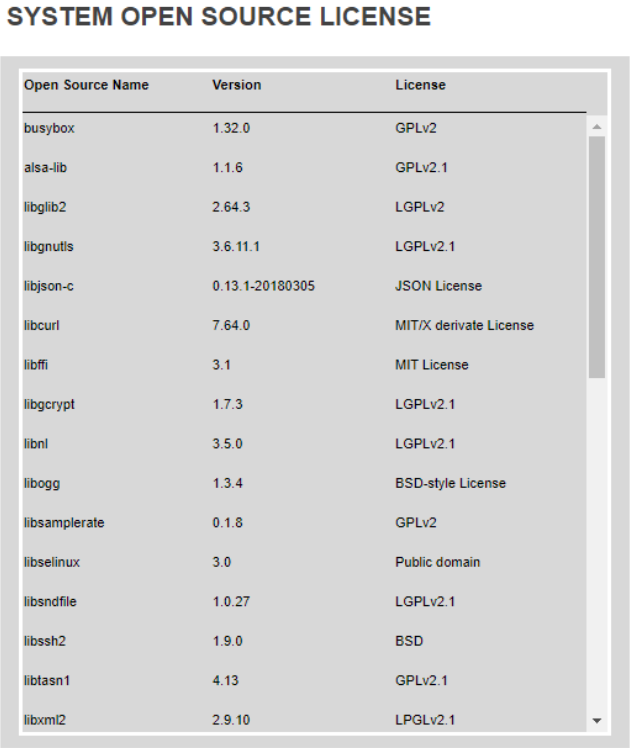

SYSTEM OPEN SOURCE LICENSE

Open Source Name	Version	License
busybox	1.32.0	GPLv2
alsa-lib	1.1.6	GPLv2.1
libglib2	2.64.3	LGPLv2
libgnutls	3.6.11.1	LGPLv2.1
libjson-c	0.13.1-20180305	JSON License
libcurl	7.64.0	MIT/X derivate License
libffi	3.1	MIT License
libgcrypt	1.7.3	LGPLv2.1
libnl	3.5.0	LGPLv2.1
libogg	1.3.4	BSD-style License
libsamplerate	0.1.8	GPLv2
libselinux	3.0	Public domain
libsndfile	1.0.27	LGPLv2.1
libssh2	1.9.0	BSD
libtasn1	4.13	GPLv2.1
libxml2	2.9.10	LPGLv2.1

This menu lists all the System Open Source License information in the camera, including Open Source Name, Version, License, etc.

Set up - System Set up
Plug-In

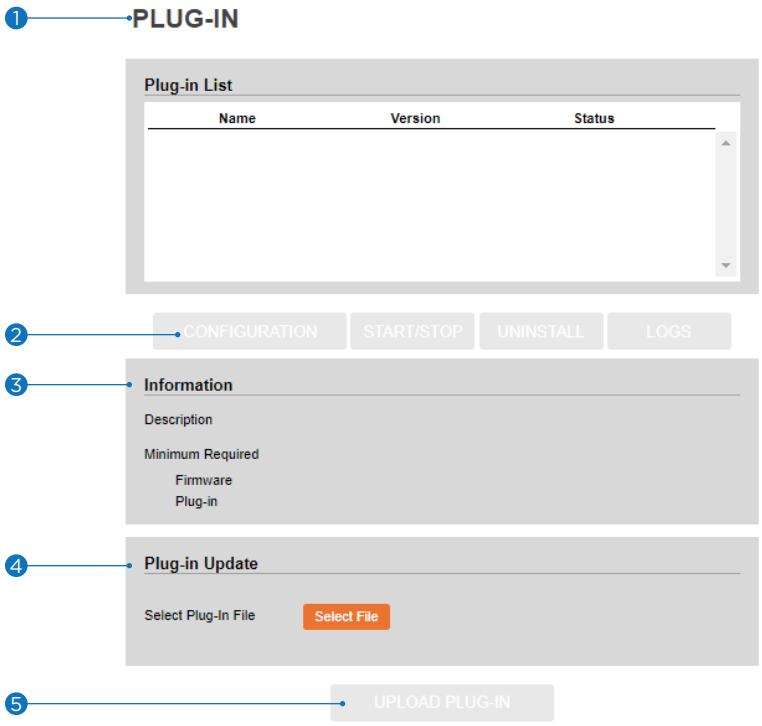

1 **Plug-in List -** View all plug-ins currently installed on the camera.

2 **Configuration -** You can access the plugin setting page using the configuration button.

Start/Stop - Enable or disable the selected plug-in.

Uninstall - Remove the selected plug-in from the list.

Logs - Download the log file for the selected plug-in.

3 **Information -** View additional information for the plug-in selected from the list.

4 **Plug-in Update -** Press the 'select file' button to upload a new plug-in file on your drive once a plug-in is selected from the list.

※ Note the available local storage on the camera before updating a plug-in. You may need to remove some plug-ins to have enough storage for a new plug-in.

5 **Upload Plug-In -** Once a new plug-in file is selected, click the 'UPLOAD PLUG-IN' button to start the update. The Progress Bar will indicate the uploading progress.

※ See the MEGApix® Ai™ user manual for more information on the analytics plug-ins, settings and activation.

Network Set up -
Quick Start of Network Connection

Follow the steps below to complete the initial network set up.

- Do not power on the IP camera until instructed.
- Temporarily disable any proxy servers configured in Internet Explorer.
- If connecting the IP camera directly to a modem, power down and reset the modem. Leave the modem powered down until the camera's configuration is complete and the IP Camera has been connected to the modem.

1. Connect the IP camera to the configured network.

2. Open the DW IP Finder on a PC on the same network as the camera and search for the camera.

- If you have a DHCP server, it will automatically set the camera's IP address and network settings.
- If you do not have a DHCP server, the camera's IP address is set by default to 192.168.1.80 after one minute In this case, the PC's IP address must be changed to match the camera's IP address settings to be able to access the camera.

3. If multiple cameras are added simultaneously, each camera can be identified by its Mac address.

4. Click on the camera's IP address and connect to the web page.

5. The default ID/password are both: admin.

6. Familiarize yourself with the viewer interface.

7. Install VLC to display live video.

8. The IP address settings can be set to 'STATIC' from the DW IP Finder or the camera's web viewer by going to Setup -> Network -> Network Settings.

9. If the IP camera is connected to a network with a router, you must have port forwarding configured on your router to access the camera from outside the network.

10. After configuring port forwarding on your router (if necessary), access your IP camera by opening Internet Explorer and typing the IP address and web port assigned to the IP camera.

- Example: http://192.168.0.200:8888
- If your web port is 80, you do not need to specify the port in the address bar to access to your IP camera.

11. Access your IP Camera via the Internet (from a different network from the one your camera is):

If you use a static IP address assigned by your ISP:

1. Open Internet Explorer.
2. Type the address of the IP camera.
3. If you use a router, enter the router's static IP and the web port number of the IP camera.

If you have a dynamic address provided by your ISP

1. Open Internet Explorer and go to your DDNS website.
2. Register the IP camera.
3. Reboot the IP camera.
4. Give the DDNS server 10 minutes to locate your IP camera's IP information.
5. Click the refresh button in Internet Explorer.
6. After your camera is connected, select your camera.

Network Set up -
DDNS Registration

If you have a DYNAMIC IP service from your Internet Service Provider (ISP), you cannot tell the current IP address of the IP Camera.
To solve this problem, you must register with our DDNS service.

First, you must check if you are using dynamic addressing. Register your IP Video Server on our DDNS website before you configure, set up, or install the IP Camera.

Even though your IP is not dynamic, you will benefit by registering your device with a DDNS service. In this case, remember ' hostname. dyndns.com/gate1' instead of a complicated series of numbers like http://201.23.4.76:8078.

For more details, contact our Support Center.

※ To use a public DDNS called 'DynDNS' or 'no-IP,' refer to the detailed information on how to use the service. (Visit: http://www.dyndns.com or http://www.no-ip.com)

Network Set up -
Guide to the Network Environment

Please configure the IP Camera at the installation site. Determine your network scenario to configure the IP Camera with the proper TCP/IP settings.
This tutorial will guide you through the process. Before actually configuring the IP Camera, determine the settings to be applied. Record those settings to be used to configure your IP Camera for reference.

When configuring your IP Camera, treat the IP Camera as another PC on your network. You will assign it to several addresses and other TCP/IP properties to match your current network.

This step-by-step tutorial will teach what IP addresses and network configurations should be assigned based on the network scenario.

1. Before you begin, locate any information and settings received from your Internet Service Provider (ISP). You may need to refer to these IP addresses later during the configuration.

Current TCP/IP Settings	
IP Address	
Subnet Mask	
Default Gateway	
Primary DNS Server	
Secondary DNS Server (Option)	

Static ☐ Dynamic ☐

> ⓘ If you were not given any IP addresses or the ISP was responsible for the set up and installation of your Internet connection, go to step 2.
> ⓘ If you are not using a router on your network, your 'Current TCP/IP Settings' (from the previous section) and 'Assigned IP Addresses from My ISP' will be exactly the same.

2. Determine whether the IP address is STATIC or DYNAMIC. Contact your ISP to get a STATIC IP address for the camera.

3. Configure your IP Camera's TCP/IP settings for network connectivity by selecting Set up from the main interface and selecting TCP/IP located on the left of the set up screen.

4. Use 'admin' for both entries if prompted for ID and password. The default web port number is 80. If the ISP blocks port 80, use a value between 1025 ~ 60000. If TCP port 80 is blocked, contact your ISP.

5. The following descriptions are several basic network scenarios. Determine which scenario describes your network. If your network does not match one of the scenarios below and you are unsure how to set up your IP camera, contact your network administrator.

> ⓘ You cannot control the rectangular gray areas and only the ISP has access to the devices.

Network Set up -
Set up Case A, B

Case A:
Dynamic IP + Personal Router [Most SOHO]

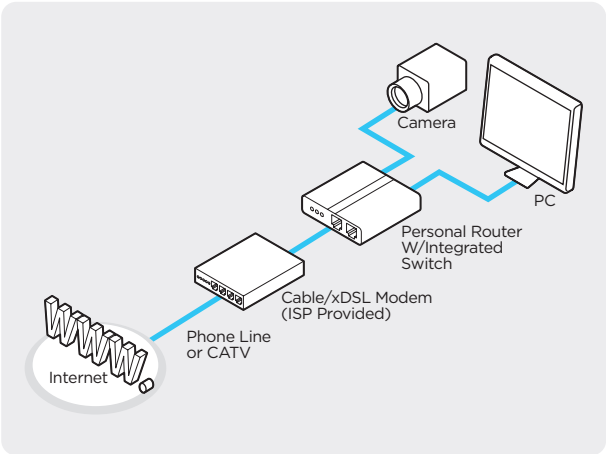

Case B:
Static(Fixed) IP + Personal Router [Efficient]

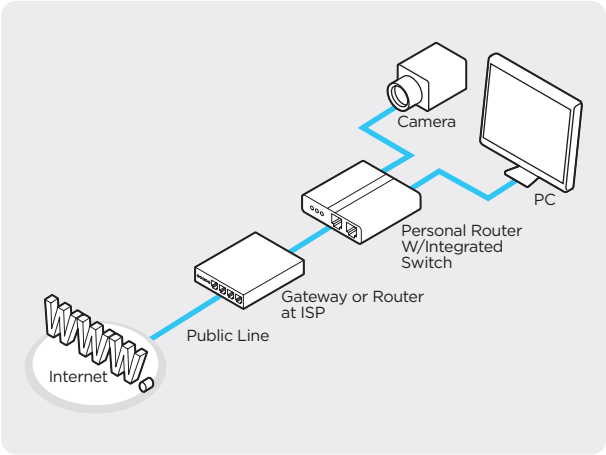

Configure your IP Camera's TCP/IP properties:

1. Network Type: STATIC (even though you have Dynamic IP from your ISP, use STATIC on the IP camera).

2. Internet Address: A private IP address such as 192.168.0.200 (example)

   - You need to assign an IP address to the IP Camera just as you do with PC.
   - The IP address you assign must be unique to your network and match your network as well.
     For information on how to choose a unique IP and match your network, read the FAQ.
   - The IP address you assign must be a private IP.
     For information on how to choose a private IP please, read the FAQ.

3. Subnet Mask: 255.255.255.0 (example)

   - You must use the same subnet mask as the one you noted under 'Current TCP/IP Settings.'

4. Default Gateway: 192.168.0.1 (example)

   - This IP address must be the IP address of your router. (private or LAN side)
   - Use the same Default Gateway you noted under 'Current TCP/IP Settings.'

5. Preferred DNS Server: Use the 1st DNS Server from 'Assigned IP Address from My ISP.'

   - If you did not receive any IP addresses from your ISP, contact the ISP and acquire the IP address of their DNS server.

6. DDNS Server: Use the DDNS server.

   - This is the same site you will register later to accommodate dynamic IP from your ISP.

7. Web Port: 8888

   - Do not use the default port 80 as this number must be changed.
   - Select a number between 1025 ~ 60000.

Network Set up -
Set up Case C, D

Case C:
Static(Fixed) IP
[Dedicated line directly to the IP Camera]

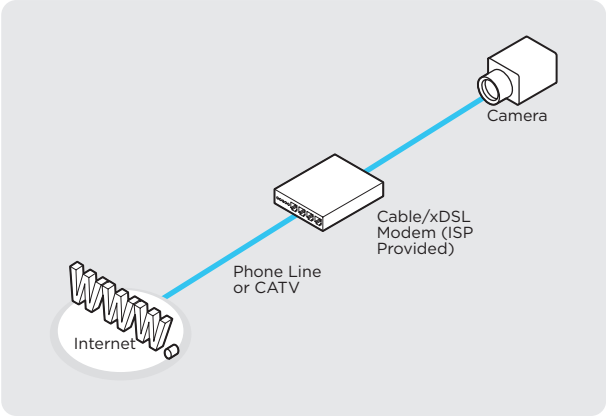

Configure your IP Camera's TCP/IP properties:

1 Network Type: STATIC

2 Internet Address: A static IP address received from your ISP, such as 24.107.88.125 (example)

> You need to assign an IP address to the IP Camera just as you do with PC.

3 Subnet Mask: Subnet mask assigned from your ISP such as 255.255.255.240 (example)

4 Default Gateway: 24.107.88.113 (example)

> Use the assigned default gateway from your ISP.

5 Preferred DNS Server: Use the 1st DNS Server from 'Assigned IP Address from My ISP.'

> If you have not received any IP addresses from your ISP, contact them to acquire the IP address of their DNS server.

6 DDNS Server: Use the DDNS server

> This is the same site you will register later to utilize our DDNS service.

7 Web Port: 80

> Select a number between 1025 ~ 60000.

Case D:
Dynamic IP + DSL/Cable Modem
[Connected directly to the IP Camera]

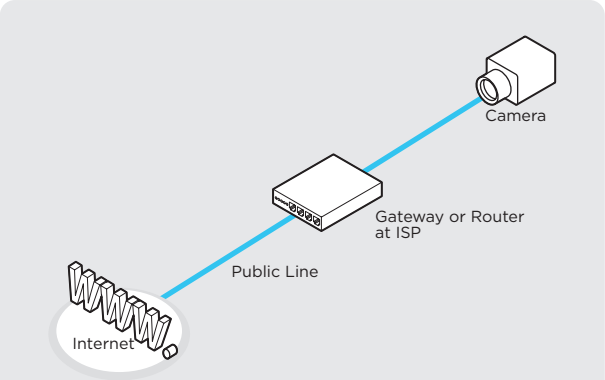

> To connect the IP Camera directly to a modem, power down and reset the modem. Leave the modem powered down until the IP camera's set up is completed and the IP camera has been connected to the modem. Then power on the modem, followed by the IP camera.

Configure your IP Camera's TCP/IP properties:

1 Network Type: DYNAMIC

2 DDNS Server: Use the DDNS server

> This is the same site you will register later to accommodate dynamic IP from your ISP.

3 Web Port: 80

> Select a number between 1025 ~ 60000.

Network Set up -
Port Forwarding

After entering the correct TCP/IP settings, you are ready for 'Port Forwarding.' (Cases A, B).

1. Use the table below to note your camera's TCP/IP settings for future reference. You may need this information to access your IP Camera and to configure 'port forwarding.'

IP camera TCP/IP settings	
IP address	
Subnet mask	
Default gateway	
Preferred DNS server	
DDNS server	
Web port	

2. After clicking 'Apply,' the system will prompt for a reboot. Please allow the system 50 seconds to reboot and accept the changes. After 50 seconds, close the configuration screen. The view will display 'Trying to Reconnect.'
   If the ACTIVE light on the IP Camera has gone off and is now back on again flashing, the IP Camera has rebooted. After the system reboots completely, remove the power supply from the unit and close Internet Explorer.

3. Return your PC/Laptop TCP/IP properties to their original settings.

4. Before installing the IP camera, you must perform port forwarding on your router (Cases A, B).
   You will need to forward one port:
   - Web Port: All the ports will be forwarded to the IP address you assigned to the IP Camera.
     In the example above, you would forward:
   - 8888 > 192.168.0.200

Network Set up - Starting IP Camera

After forwarding the web port correctly through your router (if applicable), install the IP Camera in a proper location.

1. Locate the serial number on the label attached to the bottom of the IP camera. You will need this for DDNS registration.

2. Connect the IP Camera to your router or cable/ DSL modem (per your network scenario) via a Cat5/5e UTP Ethernet network cable.

3. Supply power to the IP camera.

4. After 1 minute, verify the IP camera indicators: LINK: Flickering/Solid

5. After configuring port forwarding on your computer (if necessary), access your IP camera on your local network by opening Internet Explorer and specifying the IP address and web port assigned to the IP camera.

> i Examples: http://192.168.0.200:8888 or http://24.106.88.123
>
> i If you left your web port as 80, you do not need to specify the port in the address bar to access the IP camera.

6. Access your IP camera via the Internet :

If you use cases B, C:

1. Open Internet Explorer.
2. Type the address of the IP camera.
3. If you use a router, enter the router's static IP and the web port number of the IP camera.

If you use cases A, D:

1. Open Internet Explorer and go to your DDNS website.
2. Register the IP camera.
3. Reboot the IP camera.
4. Give the DDNS server 10 minutes to locate your IP camera's IP information.
5. Click the refresh button in Internet Explorer.
6. After your camera is connected, select your camera.

> i The difference between B and C is that B needs to set the port forwarding.
>
> i Since the type of DDNS differs from the service type, refer to the related service site.

Appendix
FAQ

1. **My POWER light is not on?**
   Power is not being supplied to the unit. Please use the power supply shipped with the unit and verify that a power source is active from the attached power outlet used to connect the adapter. You can test this by plugging in any other electrical device and verifying its operation. After using the power supply shipped with the product, checking the power source, and reinserting the power connector into the IP Camera, please call our Support Center.
   The power supply may be defective.

2. **My ACTIVE light is not flashing?**
   Verify the power supply to the unit. Power off the unit and back on again. Wait for one (1) minute. If the ACTIVE light still does not begin to flash, you will have to set the unit to its factory default (THIS WILL DELETE ANY CONFIGURATION AND SET THE UNIT TO THE FACTORY DEFAULTS).
   Power on the unit and insert the end of a paper clip into the small recessed opening on the back of the unit. Use the clip to press the button located within that opening.

3. **My LINK light is not flashing or solid?**
   Verify the cable connection. 99% of the time, the cable's connection to the unit is causing this problem. Try using a different network or crossover cable (for PC connection only). Try reinserting the cable. If this does not solve the problem, call our Support Center.

4. **I can access the video server on my LAN, but not from the Internet.**
   Verify that your router (if applicable) has port forwarding properly configured. If accessing from our DDNS service, verify the correct serial number. Firewall issues may prevent user access.

5. **How do I open an MS-DOS or Command Prompt?**
   Start > (All) Programs > Accessories > Command Prompt

6. **How do I find my IP address information if my settings are automatically detected?**
   1) Open a Command Prompt.
   2) At the prompt, type - "ipconfig / all" (without the quotes)
   3) Near the end of the information supplied should be your current IP address, subnet mask, default gateway and DNS servers.

7. **I can't connect!!**
   In the case of a connection failure.
   Modem Reboot > Modem Reboot Finished > Router Reboot > Router Reboot Finished > IP Camera Reboot > IP Camera Reboot Finish > Verify DDNS and IP Camera connection, if applicable.

8. **How do I "PING" an IP address?**
   1) Open an MS-DOS (or Command) prompt.
   2) At the prompt, type - "ping xxx.xxx.xxx.xxx" (without the quotes and replace the "x" s with an IP address).
   3) Press Enter.

9. **I'm accessing my video server remotely over the Internet, and the video stream is choppy, is this normal?**
   Yes. The frames per second received remotely are determined by your bandwidth capabilities at your site where the IP Camera is installed and your remote location. The lower of the two sites will determine how fast your video stream is received. It is recommended to have at least a 256Kb/sec upstream connection from the site where the IP Camera is installed. Lower speeds will operate properly but provide poor, remote performance. The Faster the Internet connection at both ends, the faster the video stream.

10. **How do I enable or check VLC on my browser?**

    Internet Explorer
    Open Internet Explorer > Tools on the menu bar > Internet Options > Security Tab > Custom Level > Scroll down and verify that you are prompted or have enabled plug-ins to be downloaded and executed. > click OK > restart browser.

    Chrome
    Open Chrome > Chrome menu settings > Advanced settings > Individual information - content settings > Run automatically.

11. **How do I reset the unit to factory defaults?**
    Refer to the previous functions page and find the reset button. Power ON the unit and push the reset button within that opening with a paper clip. You should then see the ACTIVE light turn off, and after a few seconds, the ACTIVE light will begin to flash, signifying a successful reboot. If the ACTIVE light does not turn off after depressing the reset button, please try holding the button in for a few seconds and releasing it. YOU WILL LOSE ALL DATA THAT HAD BEEN ENTERED PREVIOUSLY, AND THE IP CAMERA WILL BE SET TO FACTORY RESET.

Appendix - Dimension

Dimensions: Inches (mm)

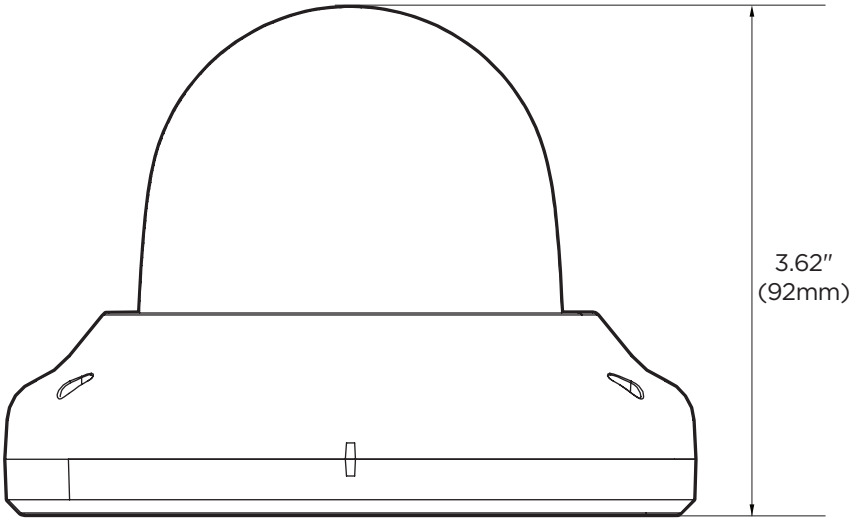

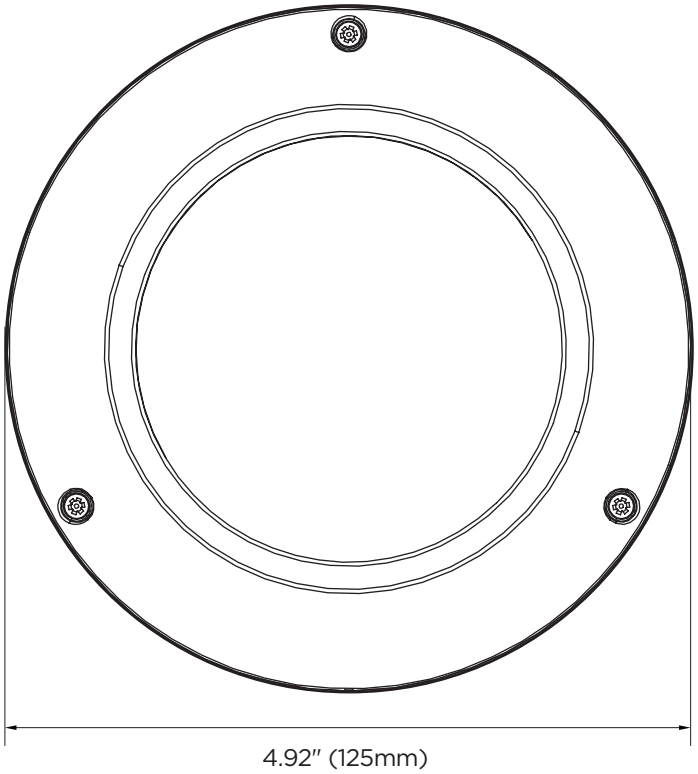

Appendix -
Product Specifications

IMAGE	
Image sensor	4K 1/2.8" CMOS sensor
Total pixels	3864(H) X 2228(V)
Active pixels	3840(H) x 2160(V)
Minimum scene illumination	0.09 lux (color), 0 lux (B/W)
S/N ratio	50dB
Test monitor video output	Local video output CVBS 1.0V p-p (75Ω), 4:3 aspect ratio
LENS	
Focal length	2.7~13.5mm, F1.4
Lens type	Vari-focal p-iris lens with motorized zoom and auto-focus
Horizontal Field of view (HFoV)	33.1°~90.3°
Vertical Field of view (VFoV)	18.9°~49°
IR distance	100ft range
Optical zoom / digital zoom	5x optical zoom
I/O	
Audio input/output	1 microphone built-in/1 output
Audio compression	G.711
Alarm input/output	1 input/1 output
Event trigger	Motion alarm, network loss, temperature anomaly, illegal login, schedule, sensor detection
INTELLIGENT VIDEO ANALYTICS	
Deep learning analytics	Deep Learning object tracking
Analytics filters	Zones and lines, tamper, metadata, intrusion, line crossing, counting, counting lines, appear, disappear, stopped, enter, exit, direction, tailgating, dwell, logical rules
OPERATIONAL	
Shutter mode	Auto, manual, anti-flicker, slow shutter
Shutter speed	1/15 ~ 1/32000
Slow shutter	1/2, 1/3, 1/5, 1/6, 1/7.5, 1/10
Auto gain control	Auto
Day and night	TDN, Auto, day (color), night (B/W)
Digital Noise Reduction (DNR)	Smart DNR™ 3D DNR
Wide Dynamic Range (WDR)	True WDR, 120dB
White balance	Yes
Privacy zones	16 programmable privacy masks
Mirror and flip	Yes
Alarm notifications	Notifications via email, FTP, alarm output and SD card recording
Memory slot	Micro SD/SDHC/SDXC class 10 card (not included)
NETWORK	
LAN	1000Base-T (1Gbps)
Video compression type	H.265, H.264, MJPEG
Resolution	H.265: 3840x2160, 2592x1944, 2560x1440, 1920x1080, 1280x720, 640x480, 640x360, 352x288, 352x240
	H.264: 3840x2160, 2592x1944, 2560x1440, 1920x1080, 1280x720, 640x480, 640x360, 352x288, 352x240
	MJPEG: 1920x1080, 1280x720, 800x600, 768x432, 704x576, 704x480, 640x480, 640x360, 352x288, 352x240
Frame rate	Up to 30fps at all resolutions
Video bitrate	100Kbps ~ 25Mbps, multi-rate for preview and recording
Bitrate control	Multi-streaming CBR/VBR at H.265 (controllable frame rate and bandwidth)
Streaming capability	Dual-stream at different rates and resolutions
IP	IPv4
Protocol	TCP/IP, UDP, AutoIP, RTP (UDP/TCP), RTSP, NTP, HTTP, HTTPS, SSL, DNS, DDNS, DHCP, FTP, SMTP, ICMP, SNMPv1/v2/v3 (MIB-2), ONVIF
Security	HTTPS (TLS), IP filtering, 802.1x, digest authentication
SIP/VoIP support	SIP VoIP
ONVIF conformance	Yes
Web viewer	OS: Windows®, Mac® OS, Linux®
	Browser: Internet Explorer®, Google Chrome®, Mozilla Firefox®, Safari®
Video management software	DW Spectrum® IPVMS
ENVIRONMENTAL	
Operating temperature	-4°F ~ 122°F (-20°C ~ 50°C)
Operating humidity	10–90% RH, (non-condensing)
IK rating/IP rating	IK10 impact-resistant, IP67-rated
Other certifications	CE, FCC, RoHS, UL, NDAA, TAA
ELECTRICAL	
Power requirement	DC12V, PoE IEEE 802.3af Class3 (Adapter not included)
Power consumption	DC12V: 10.2W, 850mA, PoE: 12.5W
MECHANICAL	
Material	Aluminum die-casting vandal housing, polycarbonate dome
Dimensions	4.92" x 3.62" (125 x 92mm)
Weight	1.14 lbs (0.52 kg)
Warranty	5 year warranty

Warranty Information

Go to https://digital-watchdog.com/page/rma-landing-page/ to learn more about Digital Watchdog's warranty and RMA.

To obtain warranty or out-of-warranty service, please contact a technical support representative at 1+ (866) 446-3595, Monday through Friday from 9:00 AM to 8:00 PM EST.

A purchase receipt or other proof of the original purchase date is required before warranty service is rendered. This warranty only covers failures due to defects in materials and workmanship that arise during normal use. This warranty does not cover damages that occur in shipment or failures which are caused by products not supplied by the Warrantor or failures which result from accident, misuse, abuse, neglect, mishandling, misapplication, alteration, modification, faulty installation, set up adjustments, improper antenna, inadequate signal pickup, maladjustments of consumer controls, improper operation, power line surge, improper voltage supply, lightning damage, rental use of the product or service by anyone other than an authorized repair facility or damage that is attributable to acts of God.

Limits and Exclusions

There are no express warranties except as listed above. The Warrantor will not be liable for incidental or consequential damages (including, without limitation, damage to recording media) resulting from using these products or arising out of any breach of the warranty. All express and implied warranties, including the warranties of merchantability and fitness for a particular purpose, are limited to the applicable warranty period set forth above.

Some states do not allow the exclusion or limitation of incidental or consequential damages or limitations on how long an implied warranty lasts, so the above exclusions or limitations may not apply to you. This warranty gives you specific legal rights; you may also have other rights from state to state.

If the problem is not handled to your satisfaction, then write to the following address:
Digital Watchdog, Inc.
ATTN: RMA Department
16220 Bloomfield Ave
Cerritos, CA 90703

Service calls which do not involve defective materials or workmanship as determined by the Warrantor, in its sole discretion, are not covered. Cost of such service calls are the responsibility of the purchaser.

DIGITAL WATCHDOG®

Complete Surveillance Solutions

DW® East Coast office and warehouse: 5436 W Crenshaw St, Tampa, FL USA 33634
DW® West Coast office and warehouse: 16220 Bloomfield Ave, Cerritos, CA USA 90703
PH: 866-446-3595 | FAX: 813-888-9262
www.Digital-Watchdog.com
technicalsupport@digital-watchdog.com
Technical Support PH:
USA & Canada 1+ 866-446-3595
International 1+ 813-888-9555
French Canadian: + 1-904-999-1309
Technical Support Hours: Monday-Friday 9 a.m. to 8 p.m. Eastern Time