MEGApix Ai™

Next-generation video analytics

DWC-XSCA05Bi

IP67 Rated

c UL us LISTED

Default login information: admin | admin

When logging into the camera for the first time, you will be prompted to set up a new password. You can set the new password using the DW IP Finder software or directly from the camera's browser menu.

WHAT'S IN THE BOX

Star Wrench (T-20)	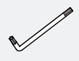	1	RJ45 Installation Tool	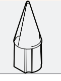	1
Test Monitor Cable		1	Moisture Absorber and Installation Guide (Recommended)		1
Screws and Plastic Anchors - 2pcs	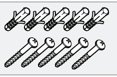	1 set	Grommet	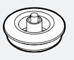	1
Quick Setup and Download Guides	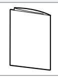	1 set			

NOTE: Download all your support materials and tools in one place

1. Go to: **http://www.digital-watchdog.com/resources**
2. Search your product by entering the part number in the **'Search by Product'** search bar. Results for applicable part numbers will populate automatically based on the part number you enter.
3. Click **'Search'**. All supported materials, including manuals and quick start guide (QSGs) will appear in the results.

Attention: This document is intended to serve as a quick reference for the initial set-up. It is recommended that the user read the entire instruction manual for complete and proper installation and usage.

SAFETY AND WARNING INFORMATION

Read through this Installation Guide carefully before installing the product. Keep the Installation Guide for future reference. See the user manual for more information on the proper installation, use and care of the product.
These instructions are intended to ensure that users can use the product correctly to avoid danger or property loss.
Warnings: Serious injury or death may occur if any of the warnings are neglected.
Cautions: Injury or equipment damage may occur if any of the cautions are neglected.

WARNING

1. In the use of the product, you must be in strict compliance with the electrical safety regulations of the nation and region. When the product is mounted on a wall or ceiling, the device shall be firmly fixed.
2. Be sure to use only the standard adapter specified in the specification sheet. Using any other adapter could cause fire, electrical shock, or damage to the product.
3. Make sure the power supply voltage is correct before using the camera.
4. Incorrectly connecting the power supply or replacing the battery may cause an explosion, fire, electric shock, or damage to the product.
5. Do not connect multiple cameras to a single adapter. Exceeding the capacity may cause excessive heat generation or fire.
6. Securely plug the power cord into the power source. An insecure connection may cause a fire.
7. When installing the camera, fasten it securely and firmly. A falling camera may cause personal injury.
8. Do not install in a location subject to elevated temperature, low temperature, or high humidity. Doing so may cause fire or electric shock.
9. Do not place conductive objects (e.g., screwdrivers, coins, metal items, etc.) or containers filled with water on top of the camera. Doing so may cause personal injury due to fire, electric shock, or falling objects.
10. Do not install in humid, dusty, or sooty locations. Doing so may cause fire or electric shock.
11. Do not install near any heat sources such as radiators, heat registers, or other products (including amplifiers) that produce heat.
12. Keep out of direct sunlight and heat radiation sources. It may cause a fire.
13. If any unusual smells or smoke come from the unit, stop using the product at once. Immediately disconnect the power source and contact the service center. Continued use in such a condition may cause fire or electric shock.
14. If this product does not operate normally, contact the nearest service center. Never disassemble or change this product in any way.
15. When cleaning the product, do not spray water directly onto parts of the product. Doing so may cause fire or electric shock.

CAUTION

1. Use proper safety gear when installing and wiring the product.
2. Do not drop objects on the product or apply strong shock to it. Keep away from a location subject to excessive vibration or magnetic interference.
3. Do not use this product near water.
4. The product shall not be exposed to dripping or splashing, and no objects filled with liquids, such as vases, shall be placed on the product.
5. Avoid aiming the camera directly towards extremely bright objects such as the sun, as this may damage the image sensor.
6. The Main plug is used as a disconnect device and shall stay readily operable at any time.
7. Remove the power adapter from the outlet during lightning. Neglecting to do so may cause fire or damage to the product.
8. Do not block any ventilation openings. Install following the manufacturer's instructions.
9. A polarized or grounding-type plug is recommended for this product. A polarized plug has two blades with one wider than the other. A grounding-type plug has two blades and a third grounding prong. If the provided plug does not fit into your outlet, consult an electrician for replacement.
10. Protect the power cord from being walked on or pinched, particularly at plugs, convenience receptacles, and the point where they exit from the product.
11. If any laser equipment is used near the product, ensure the sensor's surface is not exposed to the laser beam, as this may damage the sensor module.
12. If you want to move the already installed product, be sure to turn off the power and then move or reinstall it.
13. Proper configuration of all passwords and other security settings is the responsibility of the installer and/or end-user.
14. If cleaning is necessary, please use a clean cloth to wipe it gently. If the device will not be used for a long time, please cover the lens cap to protect the device from dirt.
15. Do not touch the camera's lens or sensor module with fingers. If cleaning is necessary, please use a clean cloth to wipe it gently. If the device will not be used for a long time, please cover the lens cap to protect the device from dirt.
16. Use only attachments/accessories specified by the manufacturer.
17. Always use hardware (e.g., screws, anchors, bolts, locking nuts, etc.) compatible with the mounting surface and of sufficient length and construction to ensure a secure mount.
18. Use only with cart, stand, tripod, bracket, or table specified by the manufacturer, or sold with the product.
19. Unplug this product when a cart is used. Use caution when moving the cart/product combination to avoid injury from tip-over.
20. Refer all servicing to qualified service personnel. Servicing is needed when the product has been damaged in any way, such as if the power supply cord or plug is damaged, liquid has been spilled, objects have fallen into the product, the product has been exposed to rain or moisture, does not operate normally, or has been dropped.

STEP 1 – PREPARING TO MOUNT THE CAMERA

1. For the installation, remove the camera cover and camera module from the mounting bracket by loosening the camera module and cover assembly screws.

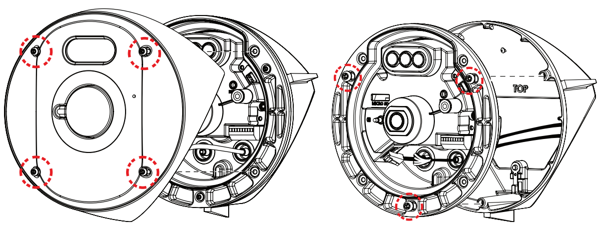

2. Remove the existing moisture packet and insert the new packet in its place. The camera will generate enough heat to dry moisture during operation. In case of a moisture issue, keep the moisture absorber in the camera for up to six (6) months.

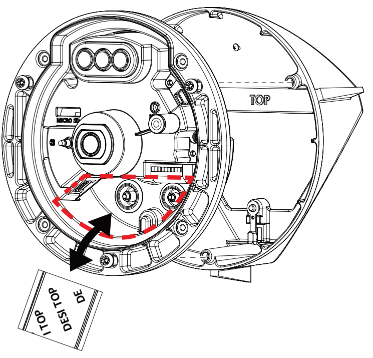

WARNING: The moisture absorber prevents moisture buildup inside the camera, which may cause image performance issues and damage the camera.

3. Using the camera's mounting bracket, mark and drill the necessary holes in the mounting surface.

STEP 2 – POWERING THE CAMERA

Pass the wires through and make all necessary connections.

Use a PoE Switch or PoE Injector to connect data and power to the camera using a single Ethernet cable.

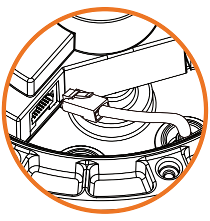

OR

Use a non-PoE Switch to connect data using an Ethernet cable and a power adapter to power the camera.

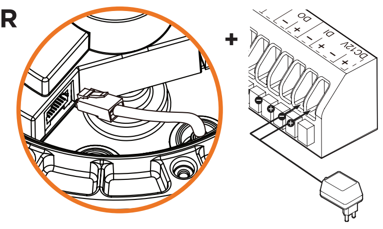

Power information	
Power requirements	DC12V, PoE IEEE 802.3af (Adapter not included)
Power consumption	DC: max 6.9W, 575mA PoE: max 8W, 166.6mA
Maximum distance	328' (100m)
Connector	RJ45

STEP 3 – INSTALLING THE CAMERA

1. Secure the mounting bracket to the mounting surface using the included screws and anchors. Ensure the bracket is mounted with 'UP' facing the ceiling.

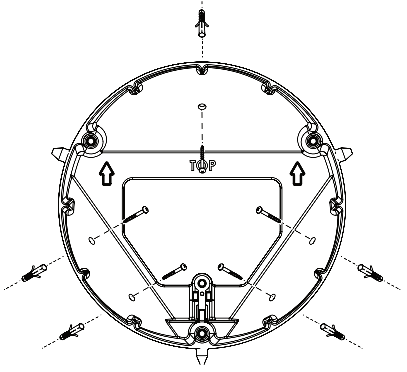

2. Attach the camera module to the mounting bracket using the safety wire and three assembly screws.

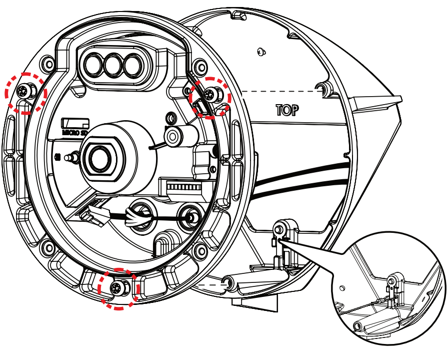

3. Secure the camera's cover by tightening the four (4) assembly screws on the cover.

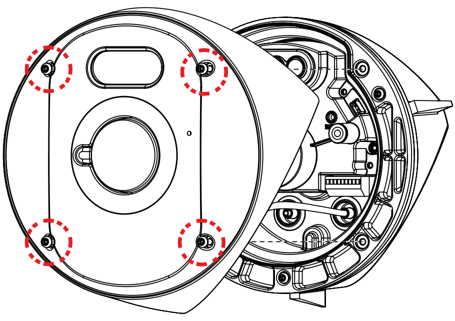

4. Remove the protective film from the dome. Softly wipe the dome with lens tissue or a microfiber cloth to remove any dust or smudges left from the installation process.

STEP 4 – CABLING AND EXTERNAL DEVICES

1. **Network cable** - To connect an RJ45 cable to the camera:

Option A (Recommended):

- a. Remove the grommet plug.
- b. Pass the network cable through the grommet at the base of the camera.
- c. Once the cable is through, add the RJ45 connector.

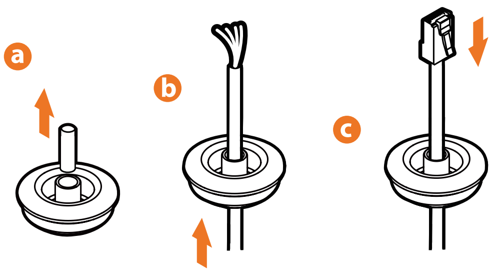

Option B:

- a. Attach the included RJ45 installation tool to the network cable.
- b. Remove the grommet plug.
- c. Pass the network cable through the grommet. Pay attention to the direction of the grommet connection.
- d. Once the cable's connector is through, remove the installation tool.

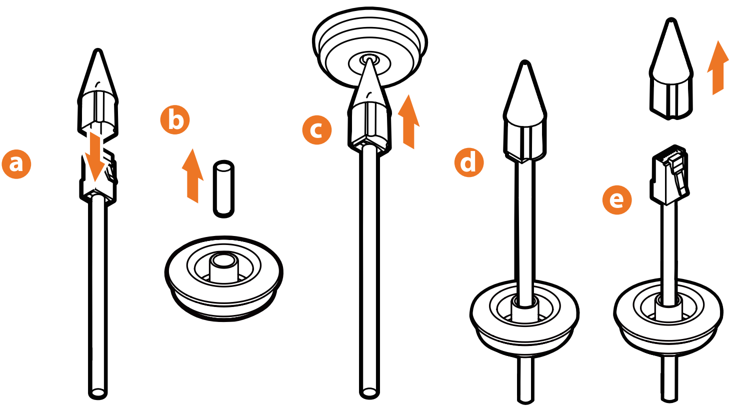

Once the network cable is passed through the grommet:

- a. Insert the grommet into the bottom of the camera base.

NOTE: Bending the cable may cause water leakage.

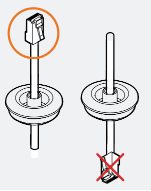

d. Connect the RJ45 to the camera's network input in the camera.

2. **Power** - See STEP 2.
3. **Sensor/Alarm Input (DI)** - Connect an alarm input device to + and - of the Terminal Block.
4. **Relay/Alarm Out (DO)** - Connect alarm lights or siren (normal open or normal close) to the + and - of the Terminal Block.
5. **Audio Input/Output** - Connect an amplifier or speaker to the audio output in the Terminal Block.

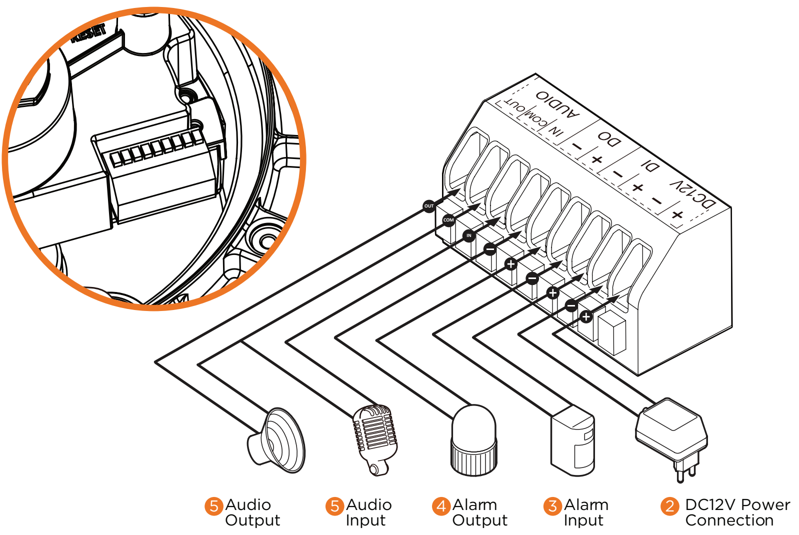

+	-	+	-	+	-	IN	COM	OUT
DC12V		**DI**		**DO**		**AUDIO**		
②		③		④		⑤		

STEP 5 – MANAGING THE SD CARD (OPTIONAL)

1. Locate the SD card slot at the base of the camera.
2. Insert a class 10 SD card into the SD card slot until it clicks into position.
3. Press the card inward to release it from the card slot.

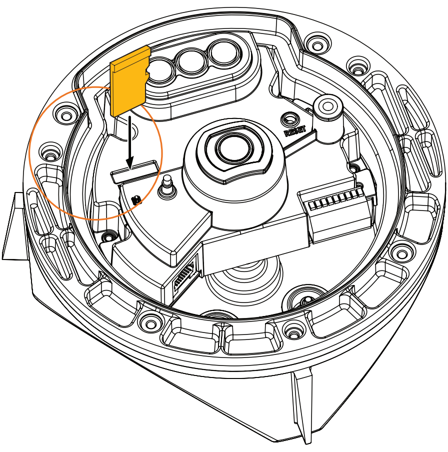

NOTE: Maximum SD Card size supported: Up to 1TB micro SD / FAT32.
When inserting the SD card into the card slot, the SD card's contacts should be facing upward, as shown in the diagram.

STEP 6 – DW IP FINDER

1. Download and install the DW IP Finder from the DW website.
2. Open the DW IP Finder and click 'Scan Devices' to find the camera on the network.
3. A password must be set when connecting to the camera for the first time.
   a. Check the box next to the camera.
   b. Click "Bulk Password Assign" on the left.
   c. Enter admin/admin for the current username and password. Enter a new username and password to the right.
   Password must have at least eight (8) characters and at least four (4) combinations of uppercase and lowercase letters, numbers and special characters. Passwords cannot contain the user ID.
   d. Click "change" to apply all changes.

STEP 7 – WEB VIEWER

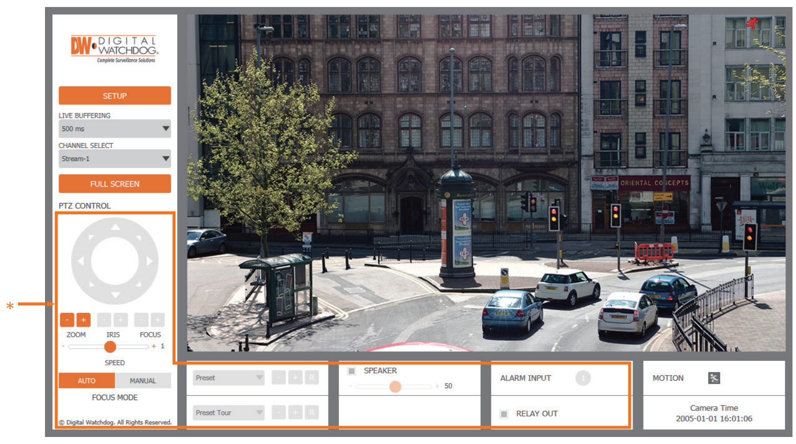

LIVE BUFFERING: 500 ms
CHANNEL SELECT: Stream-1
SPEAKER: 50
Camera Time
2005-01-01 16:01:06

* The GUI display may differ by camera model.

1. Find the camera using the DW IP Finder.
2. Double-click on the camera's view in the results table.
3. Press the 'View Camera Website.'
4. Enter the camera's username and password you set up in the DW IP Finder.
   If you did not set up a new username and password, you will be prompted to set up a new password to view the video.

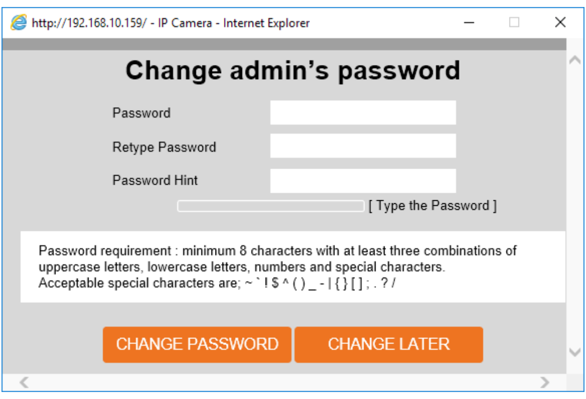

http://192.168.10.159/ - IP Camera - Internet Explorer

Change admin's password

Password
Retype Password
Password Hint
[Type the Password]

Password requirement : minimum 8 characters with at least three combinations of uppercase letters, lowercase letters, numbers and special characters.
Acceptable special characters are; ~ ` ! $ ^ ( ) _ - | { } [ ] ; . ? /

NOTE: Please see the full product manual for web viewer setup, functions and camera settings options.

NOTE: This products is covered by one or more claims of the HEVC Patents listed at patentlist.accessadvance.com.

Tel: +1 (866) 446-3595 / (813) 888-9555
digital-watchdog.com
Technical Support Hours: 9:00AM – 8:00PM EST, Monday through Friday

Copyright © Digital Watchdog. All rights reserved.
Specifications and pricing are subject to change without notice.

Rev: 07/25